ASHUN

Synthesis Catalogue of Hydraulic Cylinders, Pneumatic & Device Accessories Size.

氣油壓缸暨安裝配件尺寸綜合目錄

REGISTERED COMPANY · SOCIÉTÉ ENREGISTRÉE
ISO 9002
SGS

Standards Council of Canada
Accredited Registrar
Conseil canada des normes
Registraire accrédité
TM

ASHUN

YU SHUN *was established in 1984 without losing sight of its maxim of "QUICKLY and REALITY"or keeping promoting its production equipment to combine with the hi-tech computer technology enable to reach and improve the working efficiency and quality of products.*

" ASHUN " created brand has established a fine reputation worldwide. Indeed, YU SHUN has a symbol of quality. Our team of professional R & D staff are continuously developing new machines to meet our customers needs.

YU SHUN achieve customer satisfaction by providing solutions for the problems and challenges of growing convertion industry.

油順機械於民國73年創立以來，始終秉持"迅速、確實"的信念，不斷改良生產技術，引進自動生產設備，結合電腦科技增進工作效率並提升生產品質。

"ASHUN"品牌造就了油順之國際榮譽及品質信心的象徵。
油順研發工程師不斷致力新性能、新機種的開發。而油順的整體技術支援體系，包含售前技術諮詢，整體規劃、售後服務…等莫不以爲您解決各種有關於此方面之技術問題爲油順宗旨，油順業務部人員，隨時樂意爲您提供。

REGISTERED COMPANY · SOCIÉTÉ ENREGISTRÉE
ISO 9002
SGS

Standards Council of Canada
Accredited Registar
Conseil canada des normes
Registraire accrédité
TM

※本型錄所示尺寸，如有所變動，因無法一一通知時，敬請見諒。
Specifications and design characteristics may be change without prior notice.

快速索引 QUICK INDEX

MA- 鋁合金氣缸系列 Series Pneumatic Cylinders ..... P. 9

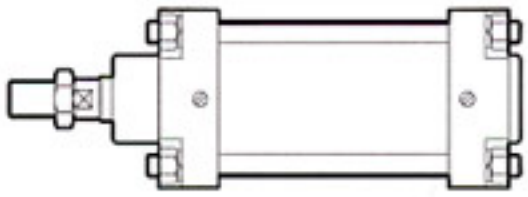

MAB MA+B (標準型) TYPE　MAD MA+D (雙軸型) TYPE
MAD MAD+AST (雙軸型附可調軸) TYPE ..... P. 10

MAB MAB+FA TYPE　MAD MAD+FA TYPE ..... P. 11

MAB MAB+FB TYPE　MAD MAD+FB TYPE ..... P. 12

MAB MAB+LB TYPE　MAD MAD+LB TYPE ..... P. 13

MAB MAB+TC TYPE　MAD MAD+TC TYPE ..... P. 14

MAB MAB+CA TYPE　MAB MAB+CB TYPE ..... P. 15

ASHUN

鋁合金氣缸採購指南 MA Series Pneumatic How to order (0.99Mpa)

MABR 63 * Ø20 * 100ST CA + Y + Es2

型 式 TYPE	
MAB	標準型
MABR	標準型附磁石
MAD	雙軸型
MADR	雙軸型附磁石

缸內徑 CYLINDER BORE	軸心(ROD) 標準-可做最大
Ø40	Ø16
Ø50	Ø20-Ø25
Ø63	Ø20-Ø25
Ø80	Ø25-Ø30
Ø100	Ø30-Ø35
Ø125	Ø35-Ø45
Ø150	Ø40-Ø50

行 程 STROKE	
鋁管	Ø40,Ø50
Ø63,Ø80,Ø100	
最大衝程2900mm	
鋁管	Ø125,Ø150
最大衝程1950mm	
鋼管	Ø40-Ø150
最大衝程4000mm	

缸體固定型式 BORE ACCESSORY	
FA	
FB	
LB	
TC	
CA	
CBP	

軸心固定型式 ROD ACCESSORY	
YP	
I	
KG	
PHS	
T	
H	
A	

磁簧開關	
記號	數量
無記號	無
Es1	1個
Es2	2個

鋁合金氣缸特性資料Specification

氣缸內徑(Bore sizes of cylinder)(mm)	Ø40	Ø50	Ø63	Ø80	Ø100	Ø125	Ø150
標準庫存行程(Standard stroke)(mm)	30,50,80,100,120,150,200,250,300,350,400,450,500,600						
工作媒體(Power fluid)	低油壓或過濾乾淨之壓縮空氣 Filtered air or hydraulic oil						
使用壓力範圍 (The range of pressure)(kg/cm²)	0.5-9.9						
使用溫度範圍 (The range of temperature)(°c)	-10~+60						
使用速度範圍 (The range of speed)(mm/sec)	3~300						
緩衝行程(Cushion stroke)(mm)	17	25	25	30	30	30	35

鋁合金氣缸結構圖 Inside Structure and Parts List

MABR

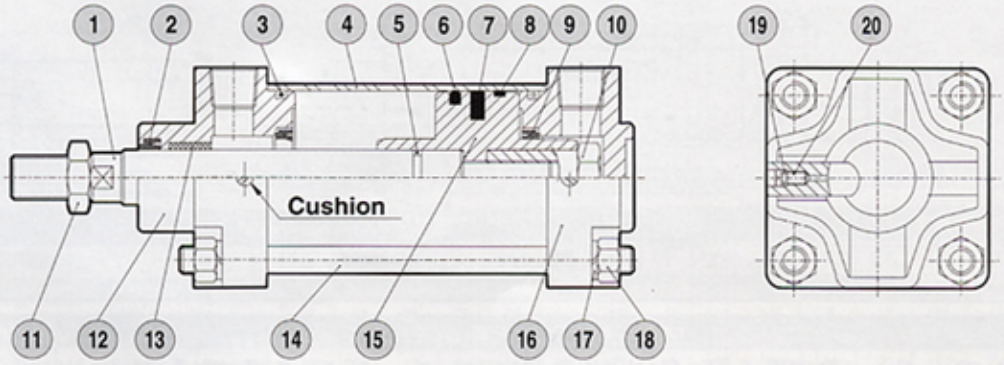

NO	零件名	Part mane	數量 Quantity	NO	零件名	Part mane	數量 Quantity	NO	零件名	Part mane	數量 Quantity
1	活塞桿	Piston rod	1	8	耐磨環	Weering ring	1	15	活塞本體	Piston	1
2	軸用封環	Rod packing	1	9	緩衝橡皮	Cushion packing	2	16	後蓋	End cover	1
3	O型環	Gasket	2	10	螺帽	Nut	1	17	彈簧華司	Spring washer	8
4	氣缸本體	Cylinder tube	1	11	軸心螺帽	Rod nut	1	18	螺帽	Nut	8
5	O型環	Gasket	1	12	前蓋	Rod cover	1	19	O型環	Gasket	2
6	橡膠活塞環	Piston packing	1	13	含油軸承	Rod bush	1	20	緩衝針	Cushion needle	2
7	磁石	Magnet	1	14	繫緊螺絲	Tie bolt	4				

Series
MAB,MAD

鋁合金氣缸尺寸圖
MA Series Dimensional Features(0.99Mpa)

MAB MA+B（標準型）TYPE

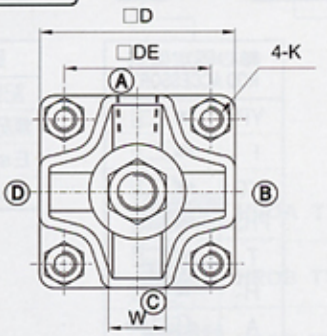

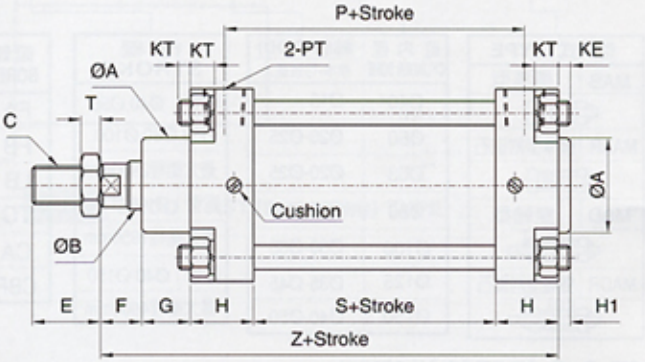

MAD MA+D（雙軸型）TYPE

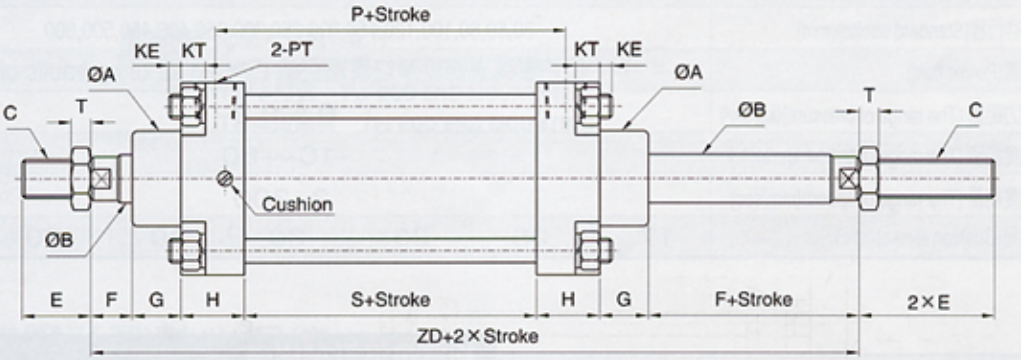

MAD MAD+AST（雙軸型附可調帽）TYPE

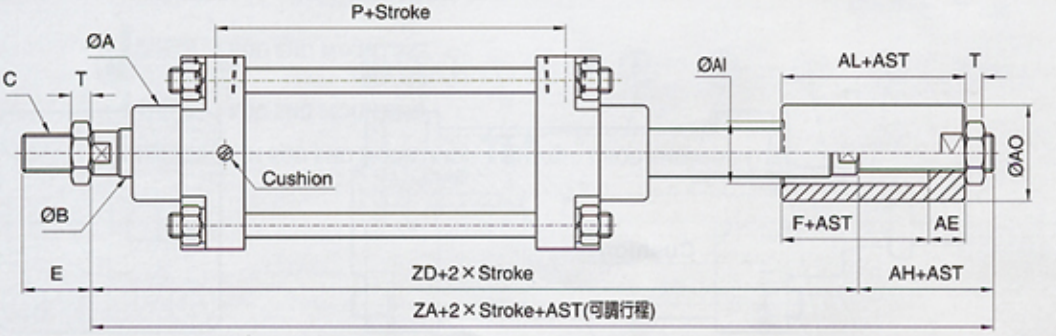

MAB-MAD TYPE																								A（可調帽）TYPE			
BORE \ SIZE	ØA	ØB	C	□D	□DE	E	F	G	H	H1	P	PM	PT	K	KE	KT	S	T	W	Z	ZA	ZD	AH	AE	ØAI	ØAO	AL
Ø40	30	16	M14XP1.5	59	44	28	13	15	26	5	67	30	1/4	M8XP1.25	10	8.5	45	8	22	125	178	153	25	15	20	30	30
Ø50	39.5	20	M16XP1.5	66	48	28	17	15	28	5	72	30	1/4	M8XP1.25	10	8.5	46	8	23.5	134	191	166	25	15	25	35	35
Ø63	39.5	20	M16XP1.5	80	60	28	17	20	26	5	74	30	3/8	M10XP1.25	10	10.5	50	8	23.5	139	201	176	25	15	25	35	35
Ø80	44.5	25	M22XP1.5	96	74	40	20	15	34	7.5	84	30	3/8	M10XP1.25	10	10.5	50	13	32	153	223	188	35	20	30	45	40
Ø100	54.5	30	M26XP1.5	116	89	40	20	20	36	7	82	30	1/2	M12XP1.5	12	13	50	13	35	162	237	202	35	20	35	50	40
Ø125	60	35	M30XP1.5	148	116	45	20	23	42	10	84	30	1/2	M14XP1.5	12	14.5	50	13	41	177	260	220	40	25	40	50	45
Ø150	70	40	M30XP1.5	172	134	50	20	27	48	5	96	40	1/2	M16XP1.5	15	17	60	13	41	203	290	250	40	25	50	60	45

備註:

1.本系列軸心加大如未註明長度尺寸時,依照本公司規定自行加工。
2.本系列MA50,MA63行程超過500mm(含)以上,軸心牙加大為M18XP1.5。
3.本系列行程超過1500mm(含)以上時,活塞(PM)長度須加倍長(尺寸P,S,Z,ZA,ZD須再加PM尺寸長度乙次)。
4.本系列行程超過2000mm(含)以上時,須加拉桿中間固定座
5.AST 為客戶指定之可調行程。

1.The length and size of axis were not specifide to constructed must be according to our company design's modify without prior notice.
2.The series stroke exceed 500mm (includes), axletree broaden be M18xP1.5.
3.The series stroke exceed (includes) 1500mm, should redouble length (PM) of piston. (Add twice length PM of size:P,S,Z,ZA,ZD).
4.When this series of stroke exceeds(includes) 2000mm,the fixed base of the pull rod must be added in the middle.
5.AST:Adjustable stroke by customer assigment.

ASHUN

鋁合金氣缸FA板尺寸圖
MA Series FA Dimensional Features(0.99Mpa)

MAB MAB+FA TYPE

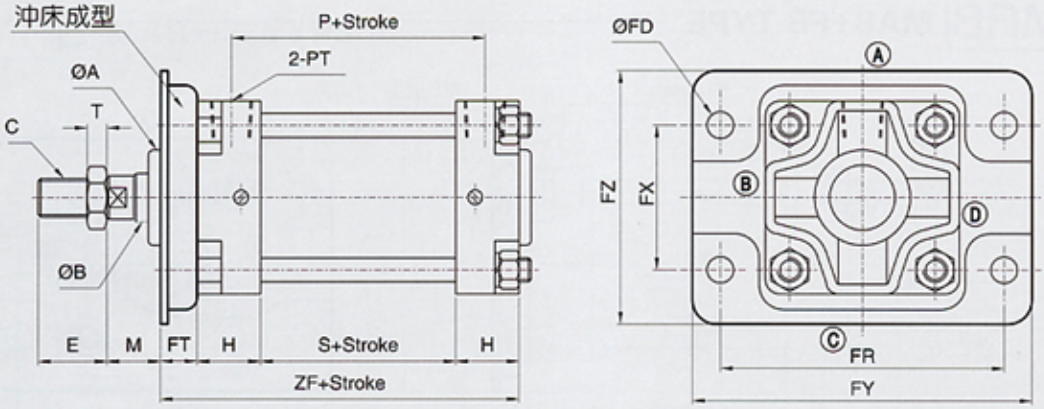

MAD MAD+FA TYPE

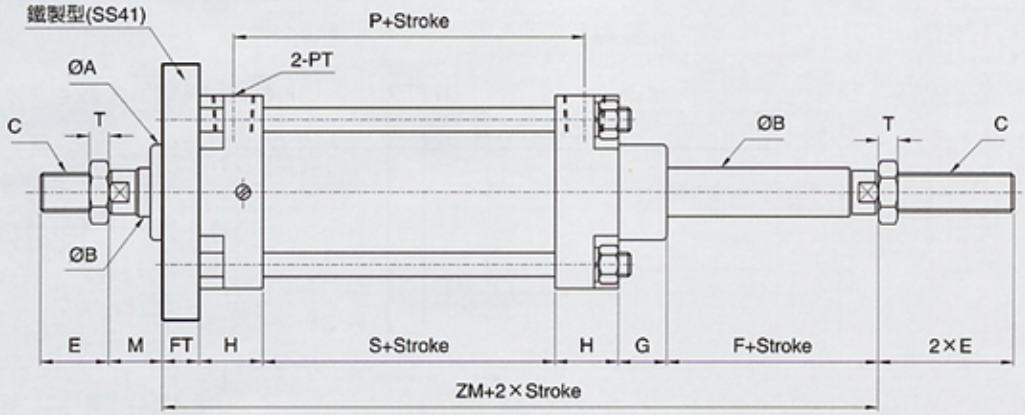

MAB-MAD TYPE																FA TYPE					
BORE \ SIZE	ØA	ØB	C	E	F	G	H	M	P	PM	PT	S	T	ZF	ZM	ØFD	FT	FR	FX	FY	FZ
Ø40	30	16	M14XP1.5	28	13	15	26	17	67	30	1/4	45	8	108	136	9	11	88	44	104	75
Ø50	39.5	20	M16XP1.5	28	17	15	28	21	72	30	1/4	46	8	113	145	9	11	104	46	125	80
Ø63	39.5	20	M16XP1.5	28	17	20	26	22	74	30	3/8	50	8	117	154	11.5	15	117	60	140	105
Ø80	44.5	25	M22XP1.5	40	20	15	34	15	84	30	3/8	50	13	138	173	14	20	131	74	161	121
Ø100	54.5	30	M26XP1.5	40	20	20	36	20	82	30	1/2	50	13	142	182	16	20	151	92	183	137
Ø125	60	35	M30XP1.5	45	20	23	42	23	84	30	1/2	50	13	154	197	16	20	183	123	220	155
Ø150	70	40	M30XP1.5	50	20	27	48	27	96	40	1/2	60	13	176	223	18	20	230	134	275	185

備註:

1.本系列軸心加大如未註明長度尺寸時,依照本公司規定自行加工。
2.本系列MA50,MA63行程超過500mm(含)以上,軸心牙加大為M18XP1.5。
3.本系列行程超過1500mm(含)以上時,活塞(PM)長度須加倍長(尺寸P,S,ZF,ZM,須再加PM尺寸長度乙次)。
4.本系列MA40-MA63標準安裝FA為沖床成型之FA(五彩),平均板厚為3mm,另有鐵製(SS41) FA可供選擇。
5.本系列MA80-MA100標準安裝FA為鑄造成型之FA(FCD-45),另有鐵製(SS41)FA可供選擇。
6.MA125-MA150之FA配件標準型均為鐵製(材質SS41)

1.The length and size of axis were not specifide to constructed must be according to our company design's modify without prior notice.
2.The series stroke exceed 500mm (includes), axletree broaden be M18xP1.5.
3.The series stroke exceed (includes) 1500mm, should redouble length (PM) of piston. (Add twice length PM of size:P,S,ZF,ZM).
4.The series MA40-MA63 is standard setting by FA punching machine shape,thickness 3mm,(5 colors) and also have material is iron (SS41) of FA for optional.
5.The series MA80-MA100 is standard setting by FA cast type (FCD-45), material iron (SS41) for optional.
6.MA125-MA150 of FA for standard accessories type all is material iron (SS41).

Series MA-FB

鋁合金氣缸FB板尺寸圖
MA Series FB Dimensional Features(0.99Mpa)

MAB MAB+FB TYPE

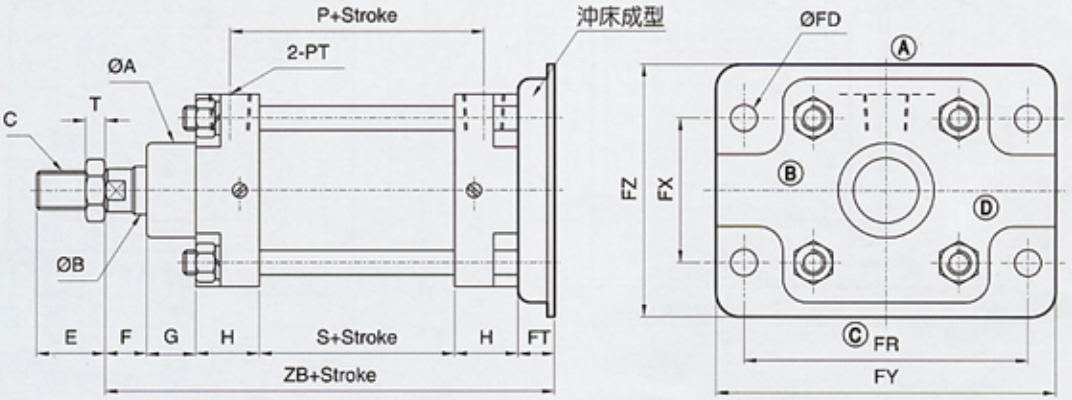

MAD MAD+FB TYPE

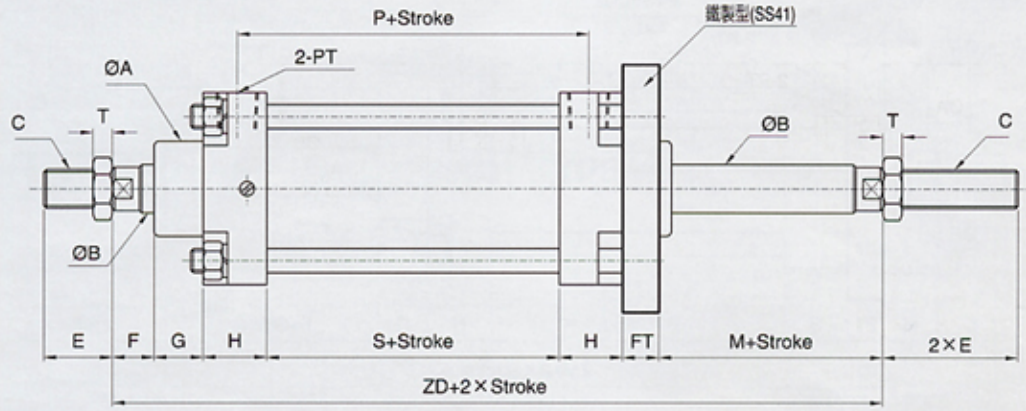

MAB-MAD TYPE																FB TYPE					
BORE \ SIZE	ØA	ØB	C	E	F	G	H	M	P	PM	PT	S	T	ZB	ZD	ØFD	FT	FR	FX	FY	FZ
Ø40	30	16	M14XP1.5	28	13	15	26	17	67	30	1/4	45	8	136	153	9	11	88	44	104	75
Ø50	39.5	20	M16XP1.5	28	17	15	28	21	72	30	1/4	46	8	145	166	9	11	104	46	125	80
Ø63	39.5	20	M16XP1.5	28	17	20	26	22	74	30	3/8	50	8	154	176	11.5	15	117	60	140	105
Ø80	44.5	25	M22XP1.5	40	20	15	34	15	84	30	3/8	50	13	173	188	14	20	131	74	161	121
Ø100	54.5	30	M26XP1.5	40	20	20	36	20	82	30	1/2	50	13	182	202	16	20	151	92	183	137
Ø125	60	35	M30XP1.5	45	20	23	42	23	84	30	1/2	50	13	197	220	16	20	183	123	220	155
Ø150	70	40	M30XP1.5	50	20	27	48	27	96	40	1/2	60	13	223	250	18	20	230	134	275	185

備註:

1.本系列軸心加大如未註明長度尺寸時,依照本公司規定自行加工。
2.本系列MA50,MA63行程超過500mm(含)以上,軸心牙加大為M18XP1.5。
3.本系列行程超過1500mm(含)以上時,活塞(PM)長度須加倍長(尺寸P,S,ZB,ZD,須再加PM尺寸長度乙次)。
4.本系列MA40-MA63標準安裝FB為沖床成型之FB(五彩),平均板厚為3mm,另有鐵製(SS41)FA可供選擇。
5.本系列MA80-MA100標準安裝FB為鑄造成型之FB(FCD-45),另有鐵製(SS41)FA可供選擇。
6.MA125-MA150之FB配件標準型均為鐵製(材質SS41)

1.The length and size of axis were not specifide to constructed must be according to our company design's modify without prior notice.
2.The series stroke exceed 500mm (includes), axletree broaden be M18xP1.5.
3.The series stroke exceed (includes) 1500mm, should redouble length (PM) of piston. (Add twice length PM of size:P,S,ZB,ZD).
4.The series MA40-MA63 is standard setting by FB punching machine shape,thickness 3mm, (5 colors) and also have material is iron (SS41) of FB for optional.
5.The series MA80-MA100 is standard setting by FB cast type (FCD-45), material iron (SS41) for optional.
6.MA125-MA150 of FB for standard accessories type all is material iron (SS41).

鋁合金氣缸LB架尺寸圖
MA Series LB Dimensional Features(0.99Mpa)

MAB MAB+LB TYPE

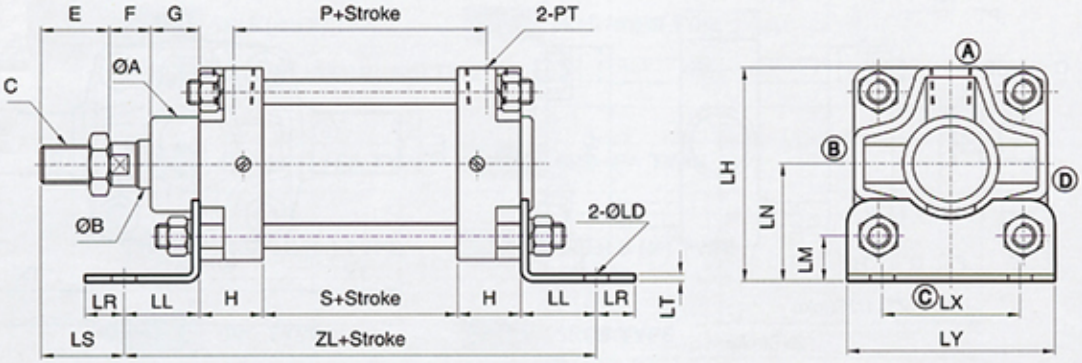

MAD MAD+LB TYPE

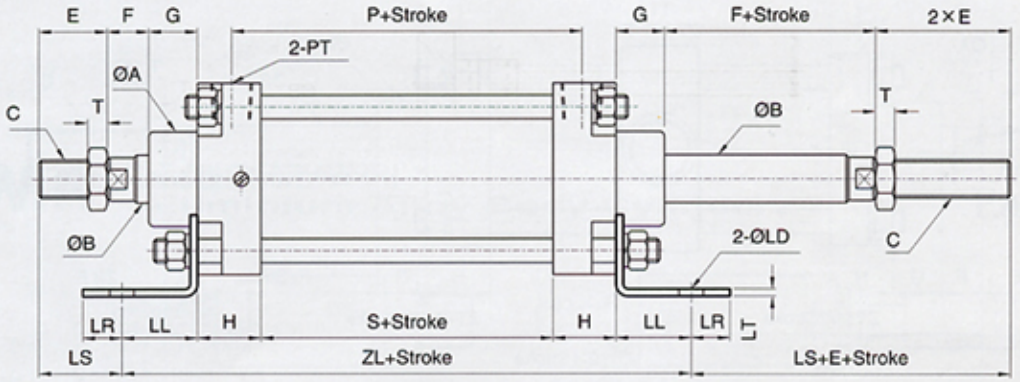

MAB-MAD TYPE																	LB TYPE						
BORE \ SIZE	ØA	ØB	C	E	F	G	H	LH	LN	LS	P	PM	PT	S	T	ZL	ØLD	LL	LM	LR	LT	LX	LY
Ø40	30	16	M14XP1.5	28	13	15	26	68	39	29	67	30	1/4	45	8	151	9	27	17	15	3	42	59
Ø50	39.5	20	M16XP1.5	28	17	15	28	71	38	29	72	30	1/4	46	8	164	10	31	14	11	3	40	65
Ø63	39.5	20	M16XP1.5	28	17	20	26	89	49	34	74	30	3/8	50	8	164	10	31	19	16	3	57	86
Ø80	44.5	25	M22XP1.5	40	20	15	34	108	60	40	84	30	3/8	50	13	188	13	35	23	15	6	74	105
Ø100	54.5	30	M26XP1.5	40	20	20	36	131	73	30	82	30	1/2	50	13	222	14	50	28.5	15	6	89	115
Ø125	60	35	M30XP1.5	45	20	23	42	160	86	40	84	30	1/2	50	13	230	16	48	30	17	6	116	152
Ø150	70	40	M30XP1.5	50	20	27	48	185	99	42	96	40	1/2	60	13	266	18	55	32	18	9	134	178

備註:

1.本系列軸心加大如未註明長度尺寸時,依照本公司規定自行加工。
2.本系列MA50,MA63行程超過500mm(含)以上,軸心牙加大為M18XP1.5。
3.本系列行程超過1500mm(含)以上時,活塞(PM)長度須加倍長(尺寸P,S,ZL須再加PM尺寸長度乙次)。
4.本系列行程超過2000mm(含)以上時,須加拉桿中間固定座。
5.MA40-MA63 LB配件標準型安裝沖床成型之LB(五彩),MA80-MA150 LB配件標準型安裝角鐵成型之LB(烤漆)。

1.The length and size of axis were not specifide to constructed must be according to our company design's modify without prior notice.
2.The series stroke exceed 500mm (includes), axletree broaden be M18xP1.5.
3.The series stroke exceed (includes) 1500mm, should redouble length (PM) of piston. (Add twice length PM of size:P,S,ZL).
4.When this series of stroke exceeds(includes) 2000mm,the fixed base of the pull rod must be added in the middle.
5.The series MA40-MA63 of LB is standard accessories type setting by LB punching machine shape, (5 colors) and also MA80-MA150 of LB standard accessories type setting by angle iron shape(coating).

Series MA-TC

鋁合金氣缸TC尺寸圖
MA Series TC Dimensional Features(0.99Mpa)

MAB MAB+TC TYPE

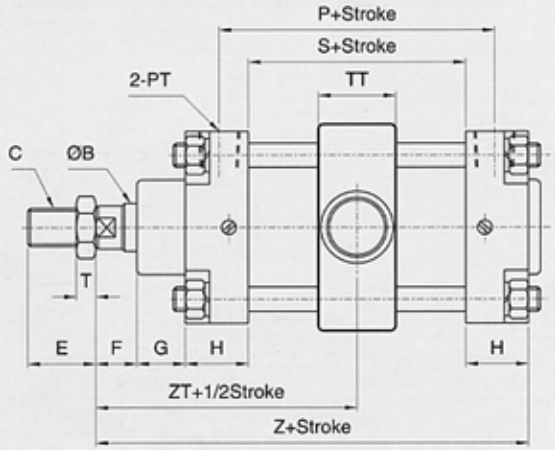

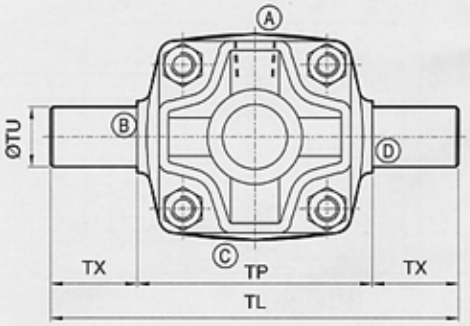

MAD MAD+TC TYPE

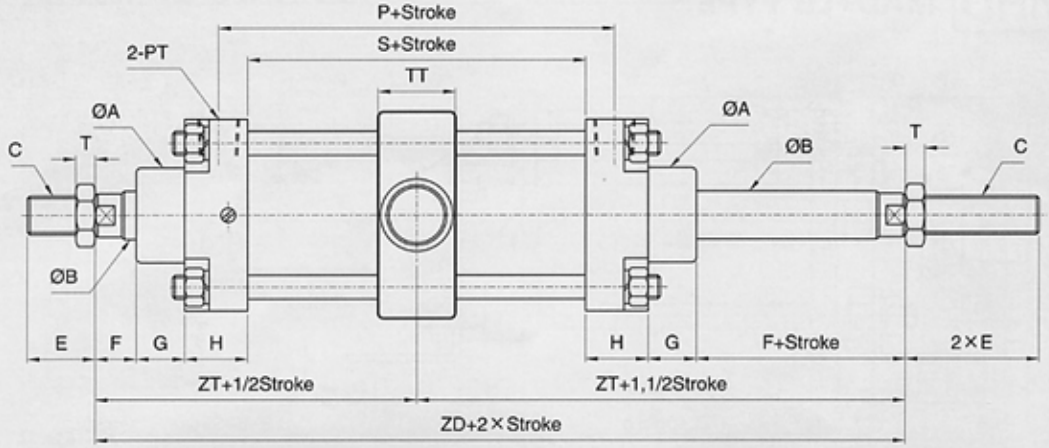

MAB-MAD TYPE																TC TYPE				
BORE \ SIZE	ØA	ØB	C	E	F	G	H	P	PM	PT	S	T	Z	ZD	ZT	ØTU	TL	TP	TT	TX
Ø40	30	16	M14XP1.5	28	13	15	26	67	30	1/4	45	8	125	153	76.5	18	127	69	25	29
Ø50	39.5	20	M16XP1.5	28	17	15	28	72	30	1/4	46	8	134	166	83	20	153	83	28	35
Ø63	39.5	20	M16XP1.5	28	17	20	26	74	30	3/8	50	8	139	176	88	25	170	98	32	36
Ø80	44.5	25	M22XP1.5	40	20	15	34	84	30	3/8	50	13	153	188	94	28	194	124	35	35
Ø100	54.5	30	M26XP1.5	40	20	20	36	82	30	1/2	50	13	162	202	101	30	222	142	38	40
Ø125	60	35	M30XP1.5	45	20	23	42	84	30	1/2	50	13	177	220	110	32	255	175	40	40
Ø150	70	40	M30XP1.5	50	20	27	48	96	40	1/2	60	13	203	250	125	35	280	200	40	40

備註:

1.本系列軸心加大如未註明長度尺寸時,依照本公司規定自行加工。
2.本系列MA50,MA63行程超過500mm(含)以上,軸心牙加大為M18XP1.5。
3.本系列行程超過1500mm(含)以上時,活塞(PM)長度須加倍長(尺寸P,S,Z,ZD須再加PM尺寸長度乙次,ZT加1/2PM尺寸長度)。
4.本系列TC配件材質為FCD-45。
5.本系列TC配件位置(ZT尺寸),可依據客戶指定尺寸裝配。

1.The length and size of axis were not specifide to constructed must be according to our company design's modify without prior notice.
2.The series stroke exceed 500mm (includes), axletree broaden be M18xP1.5.
3.The series stroke exceed (includes) 1500mm, should redouble length (PM) of piston. (Add twice and ZT 1/2 length PM of size:P,S,Z,ZD).
4.The series TC accessories material is FCD-45.
5.The series TC accessories position(ZT size) could be adjustable for customer require.

ASHUN

鋁合金氣缸CA, CB尺寸圖
MA Series CA, CB Dimensional Features(0.99Mpa)

MAB MAB+CA TYPE

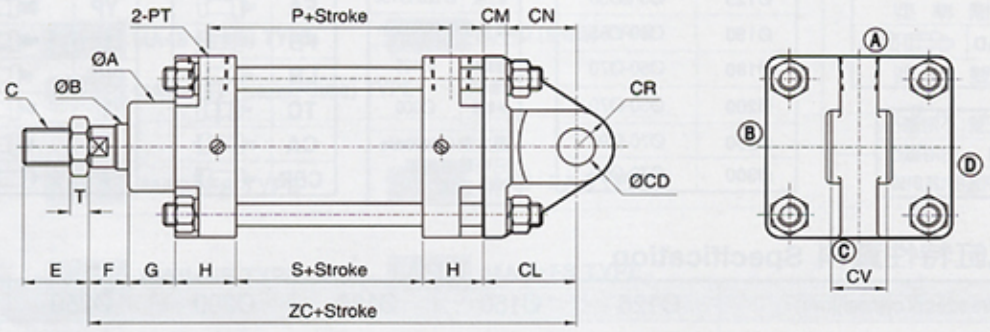

MAB MAB+CB TYPE

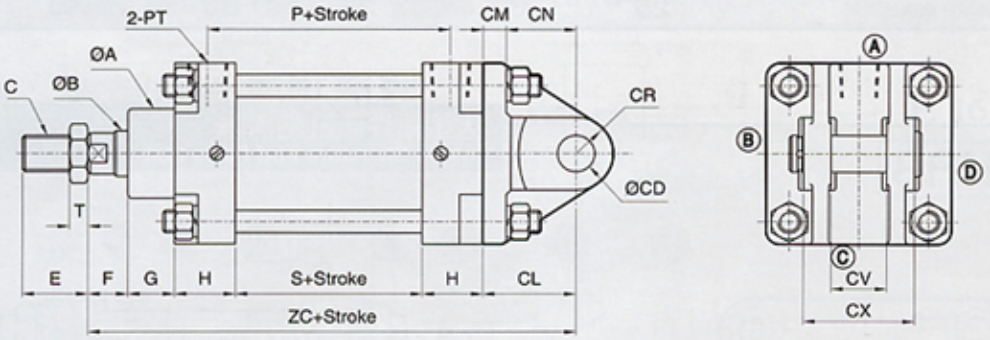

MAB TYPE														CA-CB TYPE						
BORE \ SIZE	ØA	ØB	C	E	F	G	H	P	PM	PT	S	T	ZC	CL	CM	CN	ØCD	CR	CV	CX
Ø40	30	16	M14XP1.5	28	13	15	26	67	30	1/4	45	8	155	30	10	20	12	12	14	32
Ø50	39.5	20	M16XP1.5	28	17	15	28	72	30	1/4	46	8	169	35	10	25	12	12	16	44
Ø63	39.5	20	M16XP1.5	28	17	20	26	74	30	3/8	50	8	179	40	10	30	16	16	24	48
Ø80	44.5	25	M22XP1.5	40	20	15	34	84	30	3/8	50	13	203	50	15	35	20	22	32	62
Ø100	54.5	30	M26XP1.5	40	20	20	36	82	30	1/2	50	13	224	62	18	44	25	26	35	73
Ø125	60	35	M30XP1.5	45	20	23	42	84	30	1/2	50	13	244	67	20	47	25	27	43	83
Ø150	70	40	M30XP1.5	50	20	27	48	96	40	1/2	60	13	283	80	20	60	30	35	40	80

備註:

1.本系列軸心加大如未註明長度尺寸時,依照本公司規定自行加工。
2.本系列MA50,MA63行程超過500mm(含)以上,軸心牙加大為M18XP1.5。
3.本系列行程超過1500mm(含)以上時,活塞(PM)長度須加倍長(尺寸P, S,ZC,須再加PM尺寸長度乙次)。
4.本系列行程超過2000mm(含)以上時,須加拉桿中間固定座。
5.MA40-MA125CA與MA40-MA100CB配件標準安裝為鑄造成型(材質FCD-45)之CA與CB,另有鐵製(材質SS41)焊接式之CA與CB可供選擇。
6.MA150之CA與MA125-MA150CB為鐵製(材質SS41)CA,CB焊接型。

1.The length and size of axis were not specifide to constructed must be according to our company design's modify without prior notice.
2.The series stroke exceed 500mm (includes), axletree broaden be M18xP1.5.
3.The series stroke exceed (includes) 1500mm, should redouble length (PM) of piston. (Add twice and ZT 1/2 length PM of size:P,S,ZC,).
4.When this series of stroke exceeds(includes) 2000mm,the fixed base of the pull rod must be added in the middle.
5.MA40-MA125 of CA & MA40-MA100 of CB standard accessories is cast type (material FCD-45) and also material iron SS41 of welding type for optional.
6.MA150 of CA & MA125-MA150 of CB accessories is iron welding type. (material SS41).

HA- 大型鑄件氣缸系列 Series Pneumatic Cylinders ..... P. 16

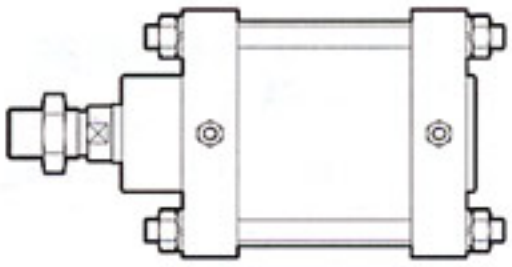

HAB HA+B (標準型) TYPE　HAD HA+D (雙軸型) TYPE

HAD HA+AST (雙軸型附可調帽) TYPE ..... P. 17

HAB HAB+FA TYPE　HAD HAD+FA TYPE ..... P. 18

HAB HAB+FB TYPE　HAD HAD+FB TYPE ..... P. 19

HAB HAB+LB TYPE　HAD HAD+LB TYPE ..... P. 20

HAB HAB+TC TYPE　HAD HAD+TC TYPE ..... P. 21

HAB HAB+CA TYPE　HAB HAB+CB TYPE ..... P. 22

Series HA□

大型鑄件氣缸採購指南 HA Series Pneumatic How to order (0.99Mpa)

HAB R 125 * Ø35 * 100ST + CA + Y

型式 TYPE	
HAB	標準型
HAD	雙軸型

無記號	不附磁石
+R	內附磁石
本系列適用0125,0150	

缸內徑 CYLINDER BORE	軸心 (ROD) 標準-可做最大
Ø125	Ø35-Ø50
Ø150	Ø40-Ø55
Ø180	Ø50-Ø70
Ø200	Ø50-Ø70
Ø250	Ø70-Ø90
Ø300	Ø70-Ø90

行程 STROKE	
鋁管	Ø125,Ø150
最大衝程1950mm	
標準型鋼管內徑無電鍍	Ø125 ~ Ø300
最大衝程4000mm 另有電鍍鋼管可供選擇	

缸體固定型式 BORE ACCESSORY
FA
FB
LB
TC
CA
CBP

軸心固定型式 ROD ACCESSORY
YP
I
PHS
T
H
A

大型氣缸特性資料 Specification

氣缸內徑(Bore sizes of cylinder)(mm)	Ø125	Ø150	Ø180	Ø200	Ø250	Ø300
標準庫存行程(Standard stroke)(mm)	50,100,150,200,250,300		交期約4-7天			
工作媒體(Power fluid)	低油壓或過濾乾淨之壓縮空氣 Filtered air or hydraulic oil					
使用壓力範圍 (The range of pressure)(kg/cm²)	1.5-9.9					
使用溫度範圍 (The range of temperature)(°c)	-10~+60					
使用速度範圍 (The range of speed)(mm/sec)	3~300					
緩衝行程(Cushion stroke)(mm)	25	30	35	35	— /50	— /50

大型鑄件氣缸結構圖 Inside Structure and Parts List

HAB

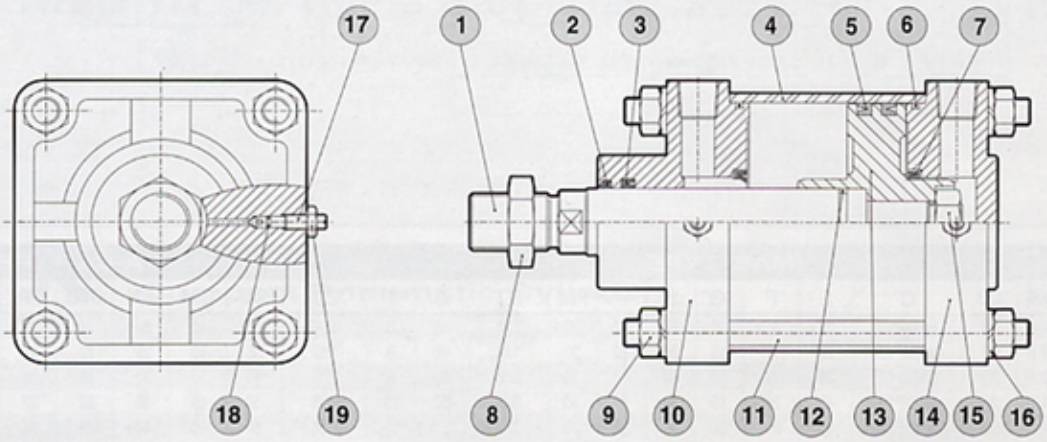

NO	零件名 Part mane		數量 Quantity	NO	零件名 Part mane		數量 Quantity	NO	零件名 Part mane		數量 Quantity
1	活塞桿	Piston rod	1	8	軸心螺帽	Rod Nut	1	15	螺帽	Nut	1
2	刮塵環	Dust wiper	1	9	螺帽	Nut	8	16	彈簧華司	Spring washer	8
3	軸用封環	Rod packing	1	10	前蓋	Rod cover	1	17	緩衝針	Cushion needle	2
4	氣缸本體	Cylinder tube	1	11	固定柱子	Tie bolt	4	18	O型環	Gasket	2
5	橡膠活塞環	Piston packing	2	12	O型環	Gasket	1	19	固定螺帽	Nut	2
6	O型環	Gasket	2	13	活塞本體	Piston	1				
7	緩衝橡皮	Cushion packing	2	14	後蓋	End cover	1				

大型鑄件氣缸尺寸圖
HA Series Dimensional Features(0.99Mpa)

HAB HA+B（標準型）TYPE

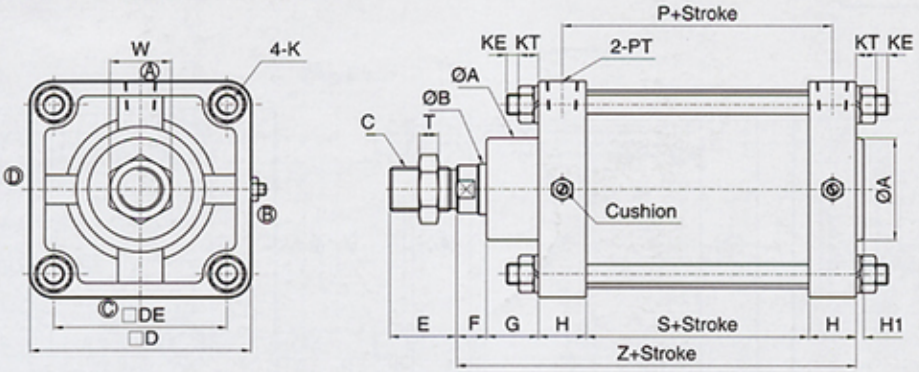

HAD HA+D（雙軸型）TYPE

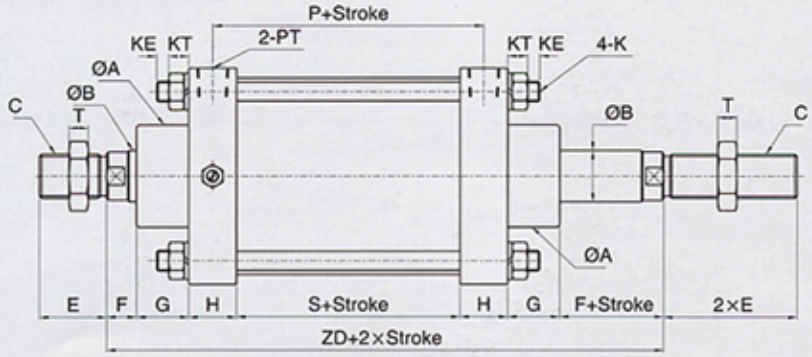

HAD HAD+AST（雙軸型附可調帽）TYPE

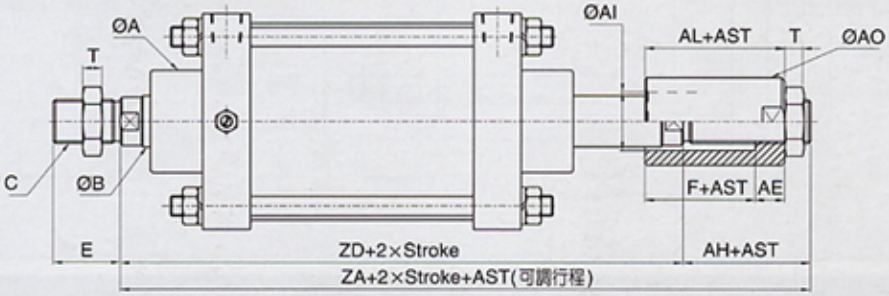

HAB-HAD TYPE																								A（可調帽）TYPE			
BORE \ SIZE	ØA	ØB	C	□D	□DE	E	F	G	H	H1	K	KE	KT	P	PM	PT	S	T	W	Z	ZA	ZD	AH	AE	ØAI	ØAO	AL
Ø125	70	35	M30XP1.5	148	116	45	20	35	32	5	M14XP1.5	10	14.5	82	30	1/2	50	13	41	169	264	224	40	25	45	60	45
Ø150	75	40	M30XP1.5	172	134	50	20	35	40	9	M16XP1.5	10	17	100	35	1/2	60	15	55	195	290	250	40	25	45	60	45
Ø180	90	50	M40XP2.0	211	165	50	25	40	45	13	M18XP1.5	15	19.5	110	40	3/4	65	15	55	220	335	285	50	30	60	80	55
Ø200	90	50	M40XP2.0	230	185	50	25	40	43	13	M18XP1.5	15	19.5	109	40	3/4	65	15	55	216	331	281	50	30	60	80	55
Ø250	118	70	M60XP2.0	276	223	70	35	43	55	13	M22XP1.5	15	23.5	145	70	3/4	90	20	80	278	421	356	65	35	80	100	70
Ø300	118	70	M60XP2.0	330	270	70	35	30	49	-	M30XP2.0	15	23.5	149	70	1	100	20	80	263	393	328	65	35	80	100	70

備註:

1.軸心加大如未註明長度尺寸時,依照本公司規定自行加工。
2.HA Ø250,Ø300規格標準型不附緩衝,如須緩衝另行報價。
3.HA 行程超過 1500(含)mm時,活塞(PM)長度為加倍長(尺寸P,S,Z,ZD,ZA須再加PM長度之尺寸乙次)。
4.HA 行程超過 2000mm(含)時,須加拉桿中間固定座。
5.軸心螺帽規格M50以上為圓型,W為其外徑。
6.AST 為客戶指定之可調行程。

1.The length and size of axis were not specifide to constructed must be according to our company design's modify without prior notice.
2.The series HAØ250~Ø300 standard type will no cushion attached, and it has to order when need it.
3.The series stroke exceed (includes) 1500mm, should redouble length (PM) of piston. (Add twice length PM of size:P,S,Z,ZD,ZA).
4.When this series of stroke exceeds(includes) 2000mm,the fixed base of the pull rod must be added in the middle.
5.External diameter is round ,and when rod nut (ØW) exceed M50.
6.AST:Adjustable stroke by customer assigment.

大型鑄件氣缸FA板尺寸圖
HA Series FA Dimensional Features(0.99Mpa)

HAB HAB+FA TYPE

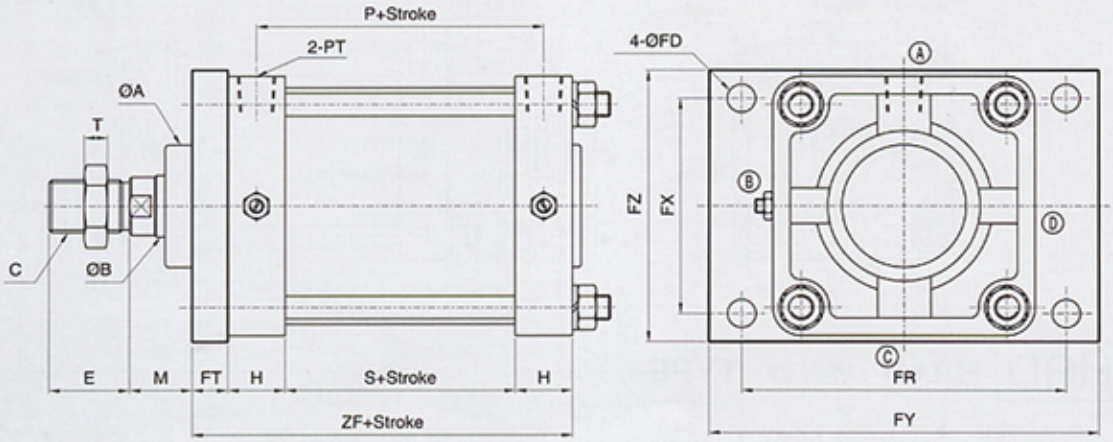

HAD HAD+FA TYPE

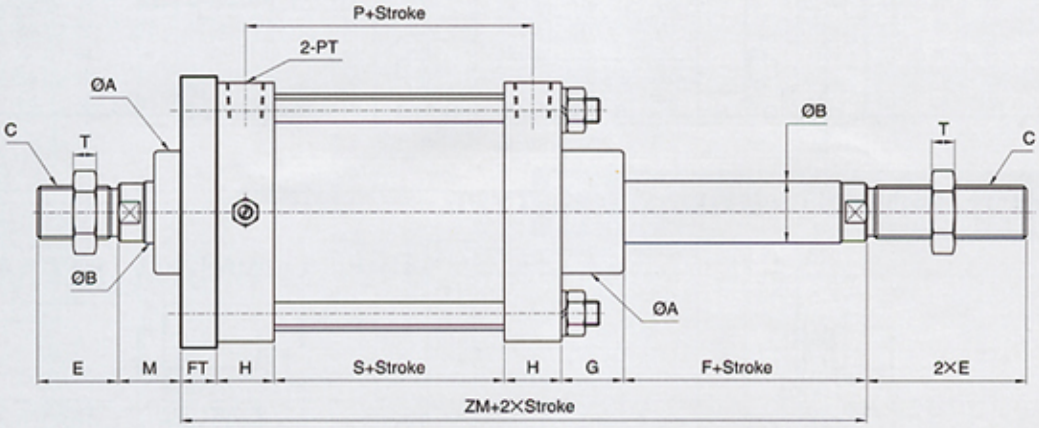

HAB-HAD TYPE																FA TYPE					
BORE \ SIZE	ØA	ØB	C	E	F	G	H	M	P	PM	PT	S	T	ZF	ZM	ØFD	FT	FR	FX	FY	FZ
Ø125	70	35	M30XP1.5	45	20	35	32	35	82	30	1/2	50	13	134	189	16	20	183	123	220	155
Ø150	75	40	M30XP1.5	50	20	35	40	35	100	35	1/2	60	15	160	215	18	20	230	134	275	185
Ø180	90	50	M40XP2.0	50	25	40	45	45	110	40	3/4	65	15	175	240	20	20	279	177	345	225
Ø200	90	50	M40XP2.0	50	25	40	43	45	109	40	3/4	65	15	171	236	20	20	294	184	365	240
Ø250	118	70	M60XP2.0	70	35	43	55	58	145	70	3/4	90	20	220	298	24	20	336	220	400	284
Ø300	118	70	M60XP2.0	70	35	30	49	35	149	70	1	100	20	228	293	24	30	410	270	470	330

備註:

1.軸心加大如未註明長度尺寸時,依照本公司規定自行加工。
2.HA Ø250,Ø300規格標準型不附緩衝,如須緩衝另行報價。
3.HA 行程超過 1500(含)mm時,活塞(PM)長度為加倍長(尺寸P,S,ZF,ZM須再加PM長度之尺寸乙次)。
4.軸心螺牙規格M50以上為圓型,W為其外徑。

1.The length and size of axis were not specifide to constructed must be according to our company design's modify without prior notice.
2.The series HAØ250~Ø300 standard type will no cushion attached, and it has to order when need it.
3.The series stroke exceed (includes) 1500mm, should redouble length (PM) of piston. (Add twice length PM of size:P,S,ZF,ZM).
4.External diameter is round ,and when rod nut (ØW) exceed M50.

大型鑄件氣缸FB板尺寸圖
HA Series FB Dimensional Features(0.99Mpa)

HAB HAB+FB TYPE

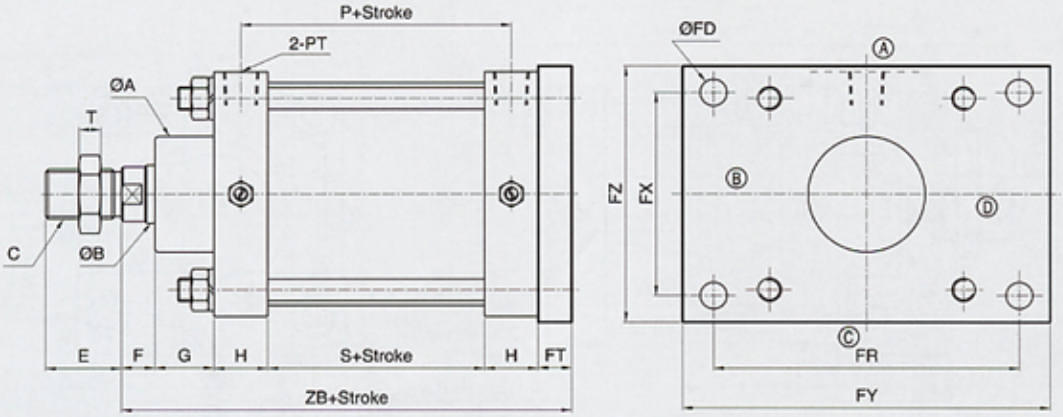

HAD HAD+FB TYPE

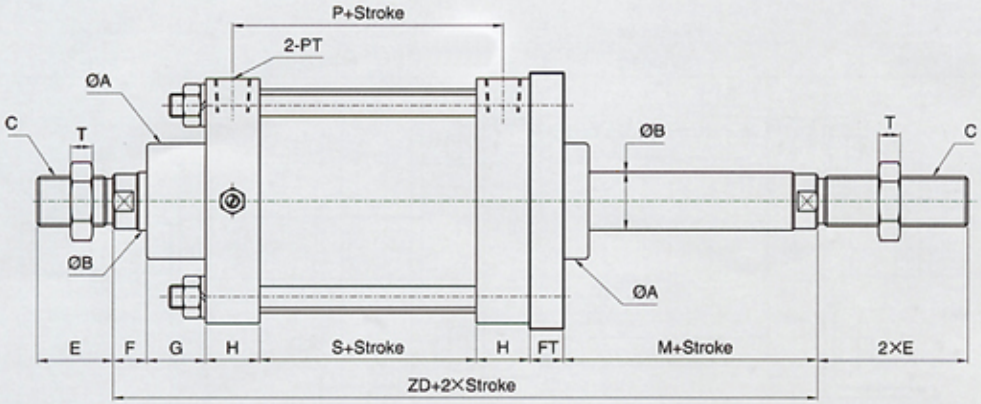

HAB-HAD TYPE																FB TYPE					
BORE \ SIZE	ØA	ØB	C	E	F	G	H	M	P	PM	PT	S	T	ZB	ZD	ØFD	FT	FR	FX	FY	FZ
Ø125	70	35	M30XP1.5	45	20	35	32	35	82	30	1/2	50	13	189	224	16	20	183	123	220	155
Ø150	75	40	M30XP1.5	50	20	35	40	35	100	35	1/2	60	15	215	250	18	20	230	134	275	185
Ø180	90	50	M40XP2.0	50	25	40	45	45	110	40	3/4	65	15	240	285	20	20	279	177	345	225
Ø200	90	50	M40XP2.0	50	25	40	43	45	109	40	3/4	65	15	236	281	20	20	294	184	365	240
Ø250	118	70	M60XP2.0	70	35	43	55	58	145	70	3/4	90	20	298	356	24	20	336	220	400	284
Ø300	118	70	M60XP2.0	70	35	30	49	35	149	70	1	100	20	293	328	30	30	410	270	470	330

備註:

1.軸心加大如未註明長度尺寸時,依照本公司規定自行加工。
2.HA Ø250,Ø300規格標準型不附緩衝,如須緩衝另行報價。
3.HA 行程超過 1500(含)mm時,活塞(PM)長度為加倍長(尺寸P,S,ZB,ZD須再加PM長度之尺寸乙次)。
4.軸心螺帽規格M50以上為圓型,W為其外徑。

1.The length and size of axis were not specifide to constructed must be according to our company design's modify without prior notice.
2.The series HAØ250~Ø300 standard type will no cushion attached, and it has to order when need it.
3.The series stroke exceed (includes) 1500mm, should redouble length (PM) of piston. (Add twice length PM of size:P,S,ZB,ZD).
4.External diameter is round ,and when rod nut (ØW) exceed M50.

Series
HA-LB

大型鑄件氣缸LB架尺寸圖
HA Series LB Dimensional Features(0.99Mpa)

HAB HAB+LB TYPE

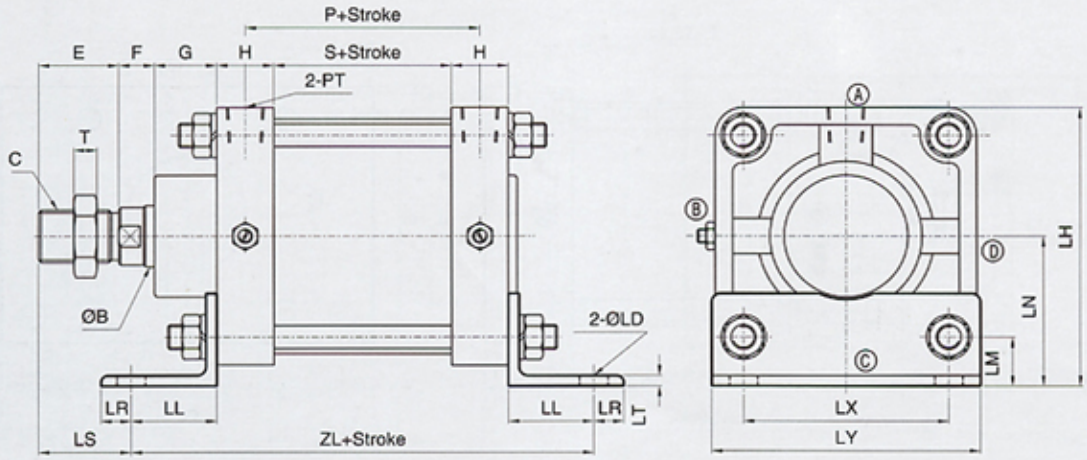

HAD HAD+LB TYPE

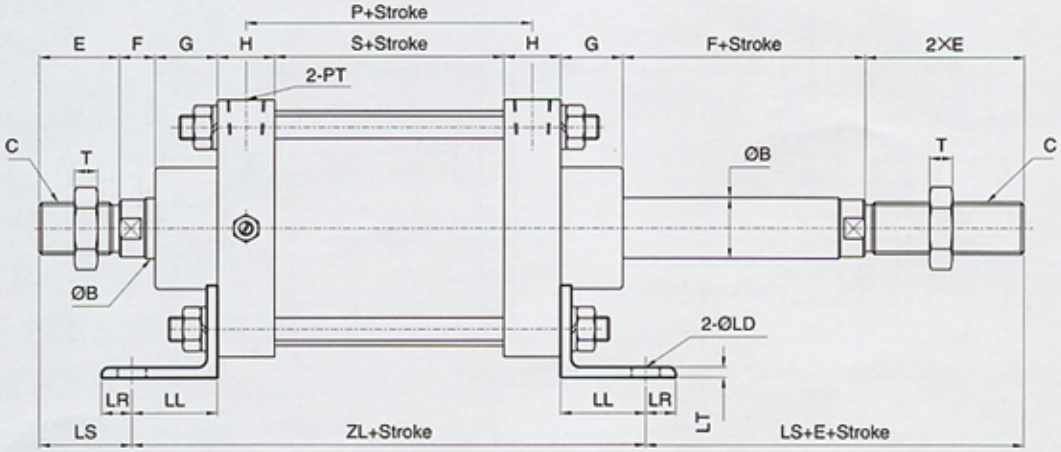

HAB-HAD TYPE																LB TYPE						
BORE \ SIZE	ØB	C	E	F	G	H	LN	LH	LS	P	PM	PT	S	T	ZL	ØLD	LL	LR	LT	LM	LX	LY
Ø125	35	M30XP1.5	45	20	35	32	86	160	52	82	30	1/2	50	13	210	16	48	17	6	28	116	152
Ø150	40	M30XP1.5	50	20	35	40	99	185	50	100	35	1/2	60	15	250	18	55	18	9	32	134	178
Ø180	50	M40XP2.0	50	25	40	45	123	231	62	110	40	3/4	65	15	261	20	53	22	9	41	165	220
Ø200	50	M40XP2.0	50	25	40	43	132	247	62	109	40	3/4	65	15	257	20	53	22	9	40	185	232
Ø250	70	M60XP2.0	70	35	43	55	160	298	88	145	70	3/4	90	20	320	24	60	24	12	48.5	223	276
Ø300	70	M60XP2.0	70	35	30	49	185	350	70	149	70	1	100	20	328	26	65	25	12	50	270	330

備註:

1.軸心加大如未註明長度尺寸時,依照本公司規定自行加工。
2.HA Ø250,Ø300規格標準型不附緩衝,如須緩衝另行報價。
3.HA 行程超過 1500(含)mm時,活塞(PM)長度為加倍長(尺寸P,S,ZL,須再加PM長度之尺寸乙次)。
4.HA 行程超過 2000mm(含)時,須加拉桿中間固定座。
5.軸心螺帽規格M50以上為圓型,W為其外徑。

1.The length and size of axis were not specifide to constructed must be according to our company design's modify without prior notice.
2.The series HAØ250~Ø300 standard type will no cushion attached, and it has to order when need it.
3.The series stroke exceed (includes) 1500mm, should redouble length (PM) of piston. (Add twice length PM of size:P,S,ZL,).
4.When this series of stroke exceeds(includes) 2000mm,the fixed base of the pull rod must be added in the middle.
5.External diameter is round ,and when rod nut (ØW) exceed M50.

ASHUN

大型鑄件氣缸TC尺寸圖
HA Series TC Dimensional Features(0.99Mpa)

HAB HAB+TC TYPE

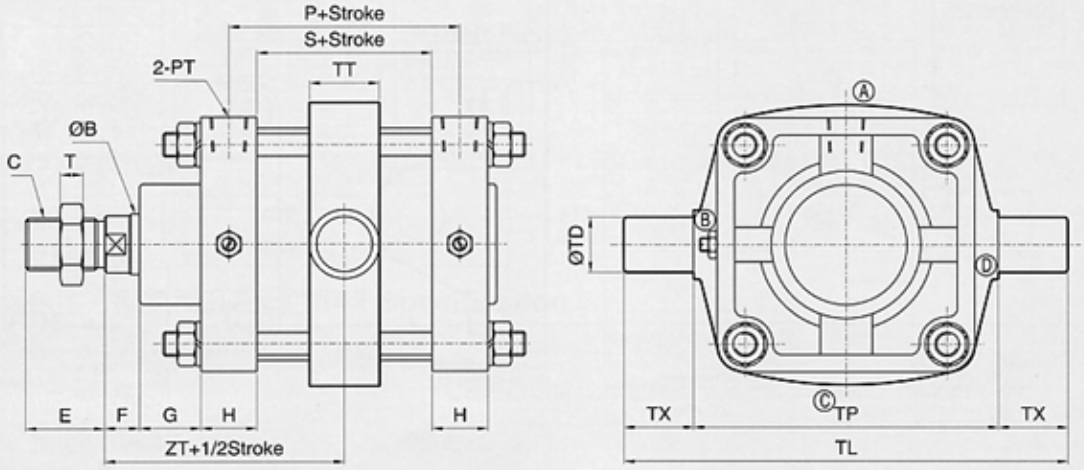

HAD HAD+TC TYPE

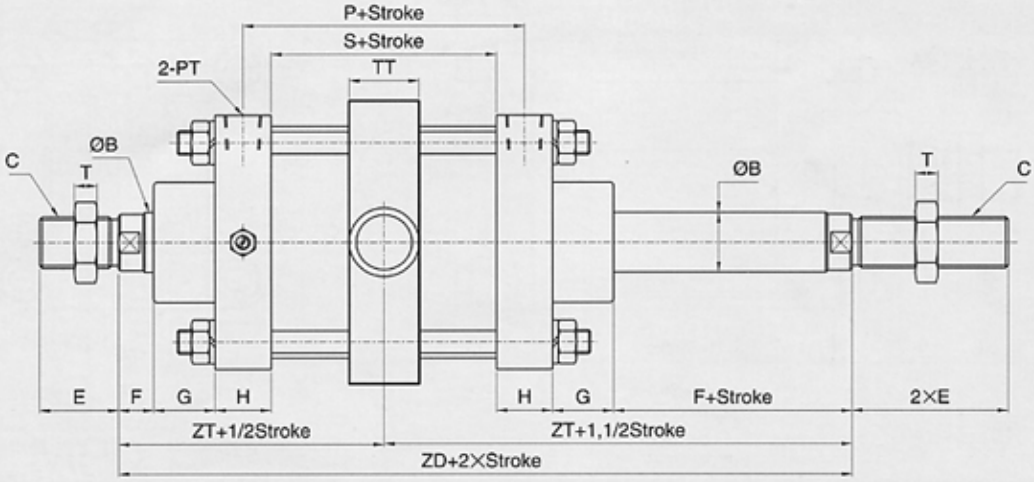

HAB-HAD TYPE														TC TYPE				
BORE \ SIZE	ØB	C	E	F	G	H	P	PM	PT	S	T	ZD	ZT	TL	TP	TT	ØTD	TX
Ø125	35	M30XP1.5	45	20	35	32	82	30	1/2	50	13	224	112	255	175	40	32	40
Ø150	40	M30XP1.5	50	20	35	40	100	35	1/2	60	15	250	125	280	200	40	35	40
Ø180	50	M40XP2.0	50	25	40	45	110	40	3/4	65	15	285	142.5	320	230	50	40	45
Ø200	50	M40XP2.0	50	25	40	43	109	40	3/4	65	15	281	140.5	345	255	50	40	45
Ø250	70	M60XP2.0	70	35	43	55	145	70	3/4	90	20	356	178	410	310	60	50	50
Ø300	70	M60XP2.0	70	35	30	49	149	70	1	100	20	328	164	500	380	70	60	60

備註:

1.軸心加大如未註明長度尺寸時,依照本公司規定自行加工。
2.HA Ø250,Ø300規格標準型不附緩衝,如須緩衝另行報價。
3.HA 行程超過 1500(含)mm時,活塞(PM)長度為加倍長(尺寸P,S,ZD須再加PM長度之尺寸乙次，ZT加1/2PM尺寸長度)
4.軸心螺帽規格M50以上為圓型,W為其外徑。

1.The length and size of axis were not specifide to constructed must be according to our company design's modify without prior notice.
2.The series HAØ250~Ø300 standard type will no cushion attached, and it has to order when need it.
3.The series stroke exceed (includes) 1500mm, should redouble length (PM) of piston. (Add twice length PM of size:P,S,ZD).(Add 1/2 length PM of size:ZT)
4.External diameter is round ,and when rod nut (ØW) exceed M50.

Series HA-CA,CB

大型鑄件氣缸CA,CB尺寸圖
HA Series CA,CB Dimensional Features(0.99Mpa)

HAB HAB+CA TYPE

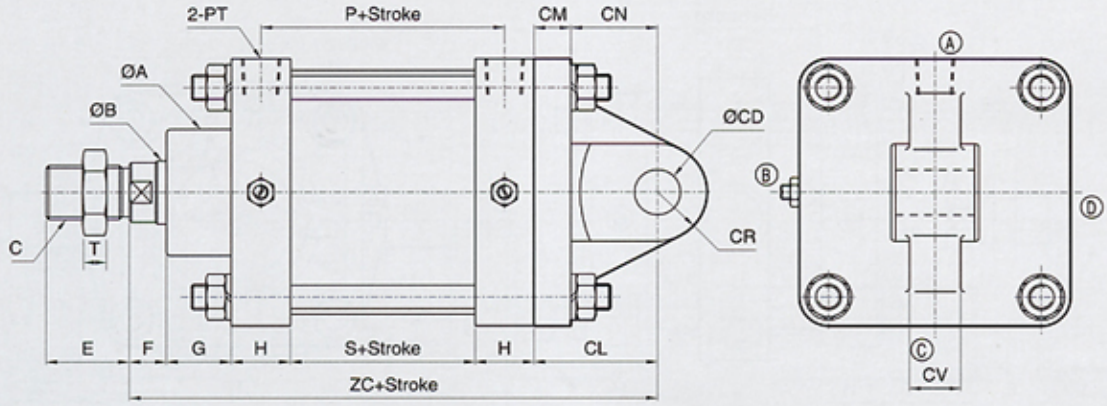

HAB HAB+CB TYPE

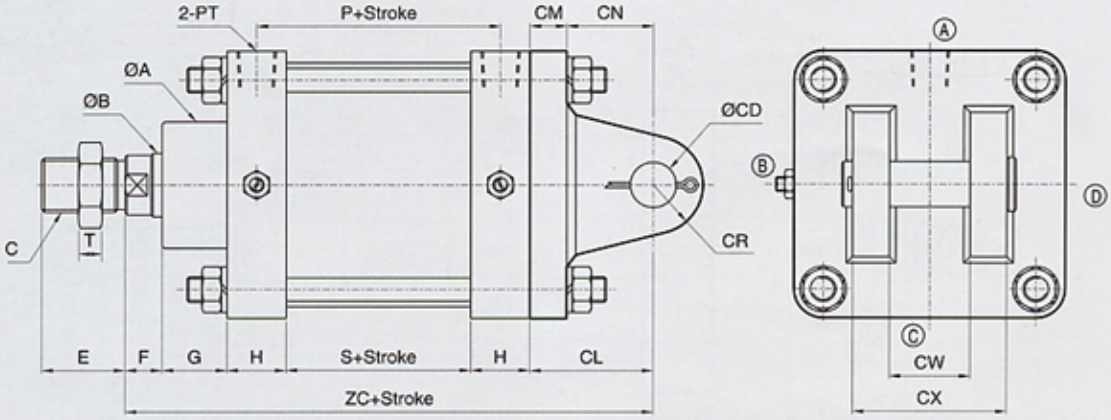

HAB TYPE														CA-CB TYPE							
BORE \ SIZE	ØA	ØB	C	E	F	G	H	P	PM	PT	S	T	ZC	CL	CM	CN	ØCD	CR	CV	CW	CX
Ø125	70	35	M30XP1.5	45	20	35	32	82	30	1/2	50	13	236	67	20	47	25	27	43	44	84
Ø150	75	40	M30XP1.5	50	20	35	40	100	35	1/2	60	15	275	80	20	60	30	35	40	41	81
Ø180	90	50	M40XP2.0	50	25	40	45	110	40	3/4	65	15	305	85	20	65	35	40	40	41	81
Ø200	90	50	M40XP2.0	50	25	40	43	109	40	3/4	65	15	301	85	20	65	35	40	40	41	81
Ø250	118	70	M60XP2.0	70	35	43	55	145	70	3/4	90	20	378	100	20	80	40	40	45	46	106
Ø300	118	70	M60XP2.0	70	35	30	49	149	70	1	100	20	383	120	30	90	50	50	50	51	121

備註:

1.軸心加大如未註明長度尺寸時,依照本公司規定自行加工。
2.HA Ø250,Ø300規格標準型不附緩衝,如須緩衝另行報價。
3.HA 行程超過 1500(含)mm時,活塞(PM)長度為加倍長(尺寸P,S,ZC須再加PM長度之尺寸乙次)。
4.HA 行程超過 2000mm(含)時,須加拉桿中間固定座。
5.軸心螺帽規格M50以上為圓型,W為其外徑。
6.HAØ 125CA配件為鑄件(材質:FCD-45),其餘CA,CB配件材質均為SS41焊接式。
7.CA, CB 焊式時,底板固定孔為攻牙式。

1.The length and size of axis were not specifide to constructed must be according to our company design's modify without prior notice.
2.The series HAØ250~Ø300 standard type will no cushion attached, and it has to order when need it.
3.The series stroke exceed (includes) 1500mm, should redouble length (PM) of piston. (Add twice length PM of size:P,S,ZC).
4.When this series of stroke exceeds(includes) 2000mm,the fixed base of the pull rod must be added in the middle.
5.External diameter is round ,and when rod nut (ØW) exceed M50.
6.HA series Ø125 of CA standard accessories is cast type (material FCD-45) and other as CA, CB accessories is material iron SS41 of welding type.
7.The fixed base of bore is tapping type when CA, CB accessories is welding type.

快速索引

QUICK INDEX

MT(P)- 壓鑄鋁合金方型氣缸系列 Series Pneumatic Cylinders ..... P. 23

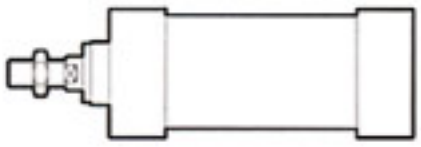
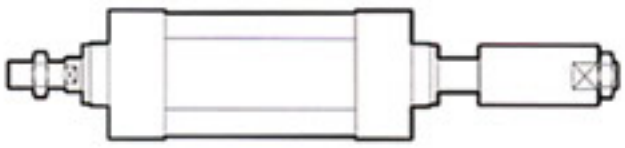

MTB MT(P)+B(標準型)TYPE　MTD MT(P)+D (雙軸型) TYPE
MPD MP(T)D+AST (雙軸型附可調緩) TYPE ..... P. 24

MTB MT(P)B+FA TYPE　MPD MP(T)D+FA TYPE ..... P. 25

MTB MT(P)B+FB TYPE　MPD MP(T)D+FB TYPE ..... P. 26

MTB MT(P)B+LA TYPE　MPD MP(T)D+LA TYPE ..... P. 27

MTB MT(P)B+LB TYPE　MPD MP(T)D+LB TYPE ..... P. 28

MTB MTB+TC TYPE　MTD MTD+TC TYPE ..... P. 29

MTB MT(P)B+CA TYPE　MTB MT(P)B+CB TYPE ..... P. 30

ASHUN

壓鑄鋁合金方型氣壓缸採購指南 MT Series Pneumatic How to order (0.99Mpa)

MTB R 63 * Ø20 * 100ST + Y + CA + Es2

型式 TYPE	
MTB	標準型
MTD	雙軸型
MPB	標準無柱型
MPD	雙軸無柱型

缸內徑 CYLINDER BORE	軸心 (ROD)
Ø32	Ø12
Ø40	Ø16
Ø50	Ø20
Ø63	Ø20
Ø80	Ø25
Ø100	Ø25

無記號	不附磁石
R	內附磁石

行程 STROKE	
鋁管	Ø32-Ø100
最大衝程2950mm	
無拉桿式鋁管	
Ø32-Ø100	
最大衝程1950mm	

缸體固定型式 BORE ACCESSORY	
FA	前法蘭型
FB	後法蘭型
LB	腳座型
LA	腳座型
TC	耳軸型
CA	單山型
CB	雙山型
CBP	CB附PIN
CAB	CA+P+CB

軸心固定型式 ACCESSORY	
YP	Y附PIN
I	I型接頭
KG	浮動接頭
PHS	魚眼接頭
T	T型接頭
H	焊套接頭
A	可調螺帽

磁簧開關 SENSOR	
記號 SIGN	數量 QUANTITY
無記號 NO SIGN	無 NO
Es1	1 PCS
Es2	2 PCS

壓鑄鋁合金方型氣壓缸特性資料 Specification

氣缸內徑(Bore sizes of cylinder)(mm)	Ø32	Ø40	Ø50	Ø63	Ø80	Ø100
工作媒體(Power fluid)	低油壓或過濾乾淨之壓縮空氣 Filtered air or hydraulic oil					
使用壓力範圍 (The range of pressure)(kg/cm²)	0.5-9.9					
使用溫度範圍 (The range of temperature)(°c)	-10~+60					
使用速度範圍 (The range of speed)(mm/sec)	3~300					
緩衝行程(Cushion stroke)(mm)	20	20	20	20	25	25

壓鑄鋁合金氣缸柱子型/無柱型結構圖 Inside Structure and Parts List

MTBR 氣缸柱子型

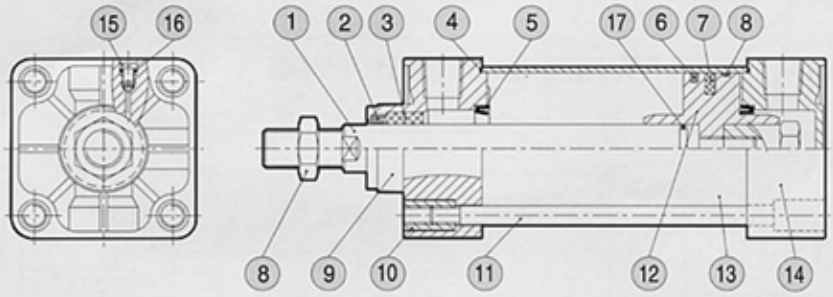

MPD 氣缸無柱型

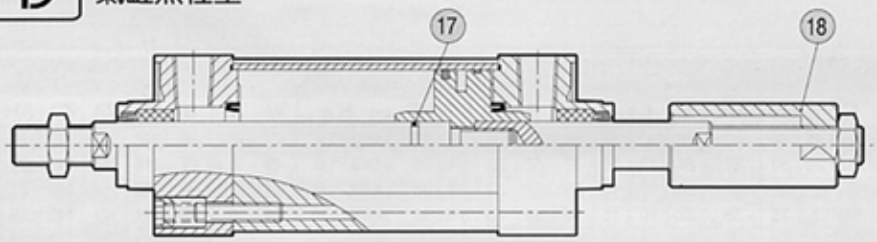

NO	零件名 Part mane		數量 Quantity	NO	零件名 Part mane		數量 Quantity	NO	零件名 Part mane		數量 Quantity
1	活塞桿	Piston rod	1	7	磁石	Magnet	1	13	氣缸本體	Cylinder tube	1
2	刮塵環	Dust wiper	1	8	軸心螺帽	Rod nut	1	14	後蓋	End cover	1
3	含油軸承	Oilless bearing	1	9	前蓋	Rod cover	1	15	緩衝針	Cushion needle	2
4	O型環	Cylinder gasket	2	10	繫緊螺帽	Tie nut	8	16	O型環	Gasket	2
5	緩衝橡皮	Cushion packing	2	11	繫緊螺絲	Tie bolt	4	17	軸心O型環	Rod gasket	1
6	橡膠活塞環	Piston packing	1	12	活塞本體	Piston	1	18	可調螺帽	Adjustble nut	1

Series
MT(P)-B,D

壓鑄鋁合金方型壓缸標準尺寸圖
MT Series Dimensional Features(0.99Mpa)

MTB MT(P)+B（標準型）TYPE

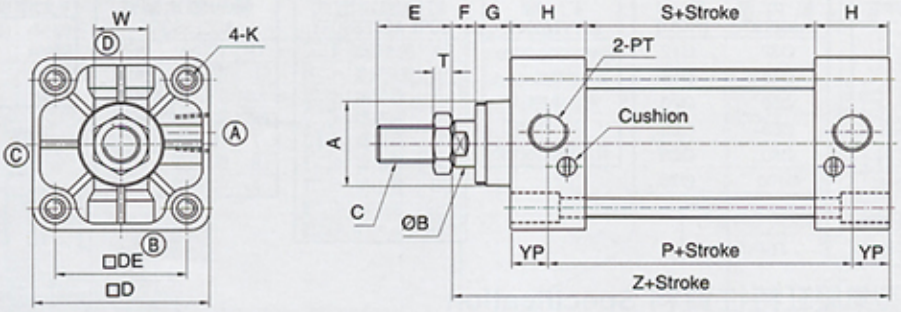

MTD MT(P)+D（雙軸型）TYPE

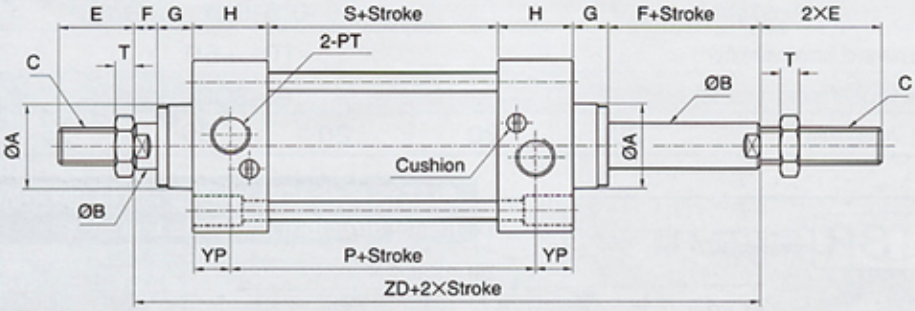

MPD MP(T)D+AST（雙軸型附可調帽）TYPE

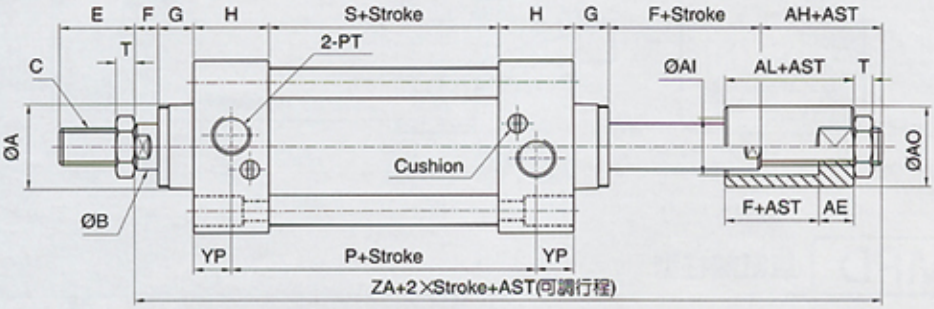

MT(P)B-MT(P)D TYPE																						A（可調帽）TYPE			
BORE \ SIZE	ØA	ØB	C	□D	□DE	E	F	G	H	P	PM	PT	YP	K	W	T	S	Z	ZA	ZD	AH	AE	ØAI	ØAO	AL
Ø32	Ø28	Ø12	M10XP1.25	44	33	22	10	15	32	61	23	1/8	16	M6XP1.0	17	8	29	118	163	143	20	10	16	25	20
Ø40	Ø32	Ø16	M12XP1.25	50	37	24	10	15	32	61	23	1/4	16	M6XP1.0	19	8	29	118	168	143	25	15	20	30	25
Ø50	Ø38	Ø20	M16XP1.5	62	47	32	10	15	32	61	23	1/4	16	M6XP1.0	24	8	29	118	168	143	25	15	25	35	25
Ø63	Ø38	Ø20	M16XP1.5	75	56	32	10	15	32	64	26	3/8	16	M8XP1.25	24	8	32	121	171	146	25	15	25	35	25
Ø80	Ø47	Ø25	M20XP1.5	94	70	40	14	21	38	68	26	3/8	20	M10XP1.25	29	9	32	143	208	178	30	20	30	40	35
Ø100	Ø47	Ø25	M20XP1.5	112	84	40	14	21	38	68	26	1/2	20	M10XP1.25	29	9	32	143	208	178	30	20	30	40	35

備註:

1.本系列符合ISO國際標準規格。
2.本系列行程超過1500mm(含)以上時,活塞(PM)長度須加倍長(尺寸P,S,Z,ZA,ZD須再加PM尺寸長度乙次)。
3.本系列行程超過2000mm(含)以上時,須加拉桿中間固定座(MPB系列不包含)。
4.AST 為客戶指定之可調行程。

1.ISO registered of standard specification.
2.The series stroke exceed (includes) 1500mm, should redouble length (PM) of piston. (Add twice length PM of size:P,S,Z,ZA,ZD).
3.When this series of stroke exceeds(includes) 2000mm,the fixed base of the pull rod must be added in the middle.(But series MPB not be included)
4.AST:Adjustable stroke by customer assigment.

ASHUN

壓鑄鋁合金方型氣壓缸FA板尺寸圖
MT Series FA Dimensional Features(0.99Mpa)

MTB MT(P)B+FA TYPE

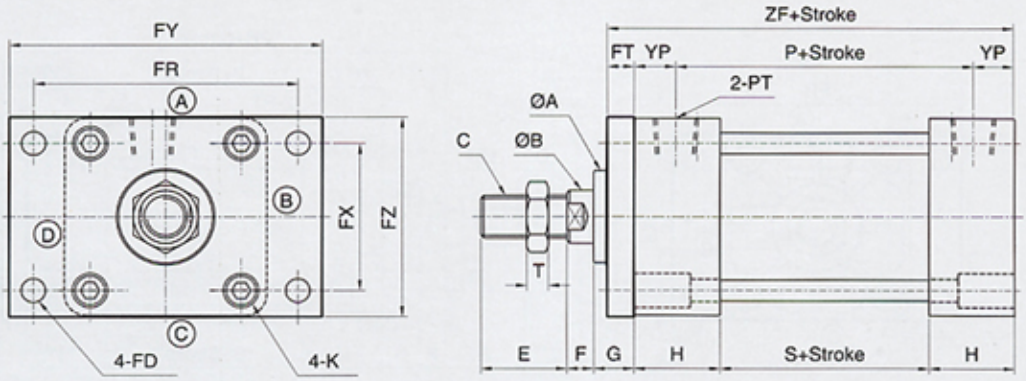

MPD MP(T)D+FA TYPE

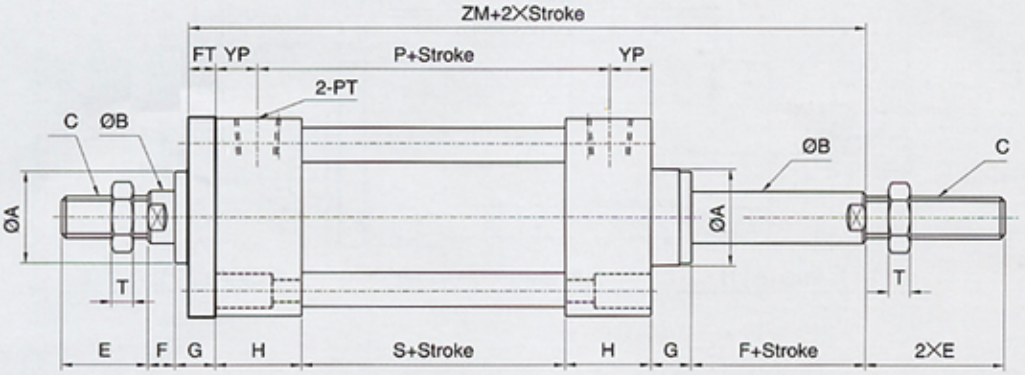

MT(P)B-MT(P)D TYPE																	FA TYPE					
BORE \ SIZE	ØA	ØB	C	E	F	G	H	P	PM	PT	PY	K	T	S	ZF	ZM	ØFD	FT	FR	FX	FY	FZ
Ø32	Ø28	Ø12	M10XP1.25	22	10	15	32	61	23	1/8	16	M6XP1.0	8	29	103	128	Ø7	10	58	33	72	47
Ø40	Ø32	Ø16	M12XP1.25	24	10	15	32	61	23	1/4	16	M6XP1.0	8	29	103	128	Ø7	10	70	36	84	52
Ø50	Ø38	Ø20	M16XP1.5	32	10	15	32	61	23	1/4	16	M6XP1.0	8	29	103	128	Ø9	10	86	47	104	65
Ø63	Ø38	Ø20	M16XP1.5	32	10	15	32	64	26	3/8	16	M8XP1.25	8	32	106	131	Ø9	10	98	56	116	76
Ø80	Ø47	Ø25	M20XP1.5	40	14	21	38	68	26	3/8	20	M10XP1.25	9	32	124	159	Ø12	16	119	70	143	95
Ø100	Ø47	Ø25	M20XP1.5	40	14	21	38	68	26	1/2	20	M10XP1.25	9	32	124	159	Ø12	16	138	84	162	115

備註:

1.本系列符合ISO國際標準規格。
2.本系列行程超過1500mm(含)以上時,活塞(PM)長度須加倍長(尺寸P,S,ZF,ZM須再加PM尺寸長度乙次)。
3.本系列行程超過2000mm(含)以上時,須加拉桿中間固定座(MPB系列不包含)。

1.ISO registered of standard specification.
2.The series stroke exceed (includes) 1500mm, should redouble length (PM) of piston. (Add twice length PM of size:P,S,ZF,ZM).
3.When this series of stroke exceeds(includes) 2000mm,the fixed base of the pull rod must be added in the middle.(But series MPB not be included)

Series
MT(P)-FB

壓鑄鋁合金方型氣壓缸FB板尺寸圖
MT Series FB Dimensional Features(0.99Mpa)

MTB MT(P)B+FB TYPE

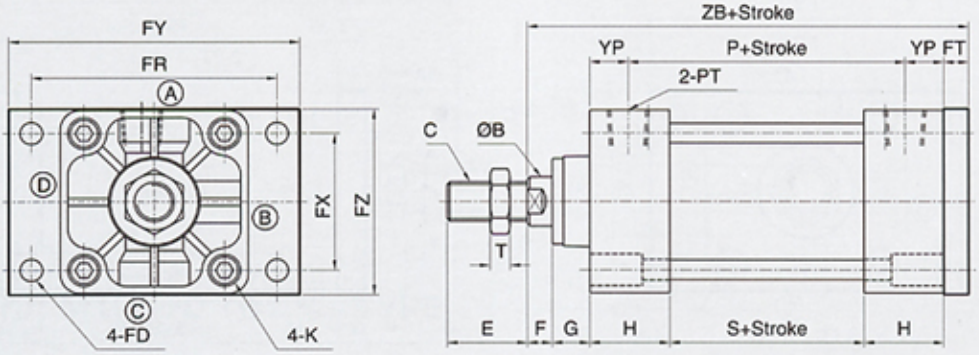

MPD MP(T)D+FB TYPE

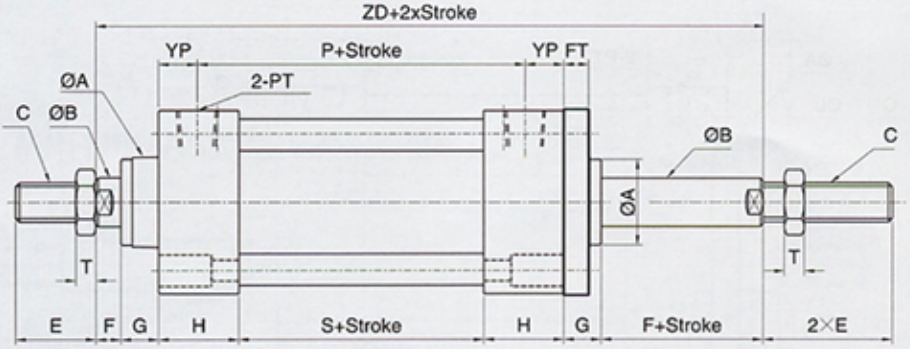

MT(P)B-MT(P)D TYPE																	FB TYPE					
BORE \ SIZE	ØA	ØB	C	E	F	G	H	P	PM	PT	PY	K	T	S	ZB	ZD	ØFD	FT	FR	FX	FY	FZ
Ø32	Ø28	Ø12	M10XP1.25	22	10	15	32	61	23	1/8	16	M6XP1.0	8	29	128	143	Ø7	10	58	33	72	47
Ø40	Ø32	Ø16	M12XP1.25	24	10	15	32	61	23	1/4	16	M6XP1.0	10	29	128	143	Ø7	10	70	36	84	52
Ø50	Ø38	Ø20	M16XP1.5	32	10	15	32	61	23	1/4	16	M6XP1.0	8	29	128	143	Ø9	10	86	47	104	65
Ø63	Ø38	Ø20	M16XP1.5	32	10	15	32	64	26	3/8	16	M8XP1.25	8	32	131	146	Ø9	10	98	56	116	76
Ø80	Ø47	Ø25	M20XP1.5	40	14	21	38	68	26	3/8	20	M10XP1.25	9	32	159	178	Ø12	16	119	70	143	95
Ø100	Ø47	Ø25	M20XP1.5	40	14	21	38	68	26	1/2	20	M10XP1.25	9	32	159	178	Ø12	16	138	84	162	115

備註:

1.本系列符合ISO國際標準規格。
2.本系列行程超過1500mm(含)以上時,活塞(PM)長度須加倍長(尺寸P,S,ZB,ZD須再加PM尺寸長度乙次)。
3.本系列行程超過2000mm(含)以上時,須加拉桿中間固定座(MPB系列不包含)。

1.ISO registered of standard specification.
2.The series stroke exceed (includes) 1500mm, should redouble length (PM) of piston. (Add twice length PM of size:P,S,ZB,ZD).
3.When this series of stroke exceeds(includes) 2000mm,the fixed base of the pull rod must be added in the middle.(But series MPB not be included)

壓鑄鋁合金方型氣壓缸LA尺寸圖
MT Series LA Dimensional Features(0.99Mpa)

MTB MT(P)B+LA TYPE

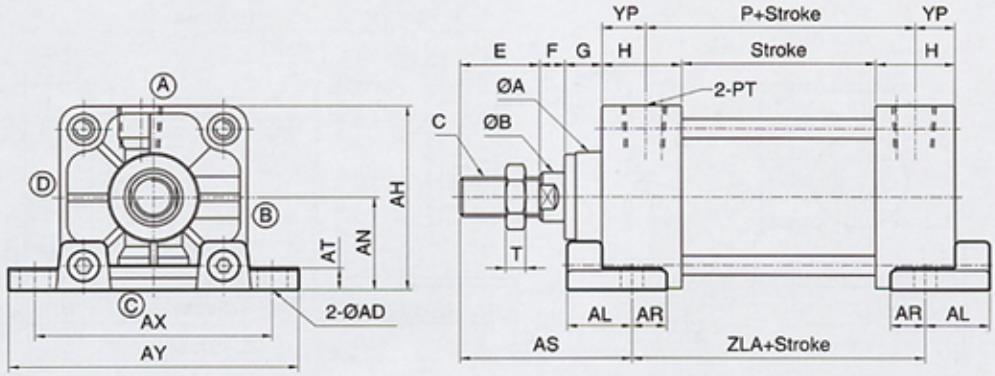

MPD MP(T)D+LA TYPE

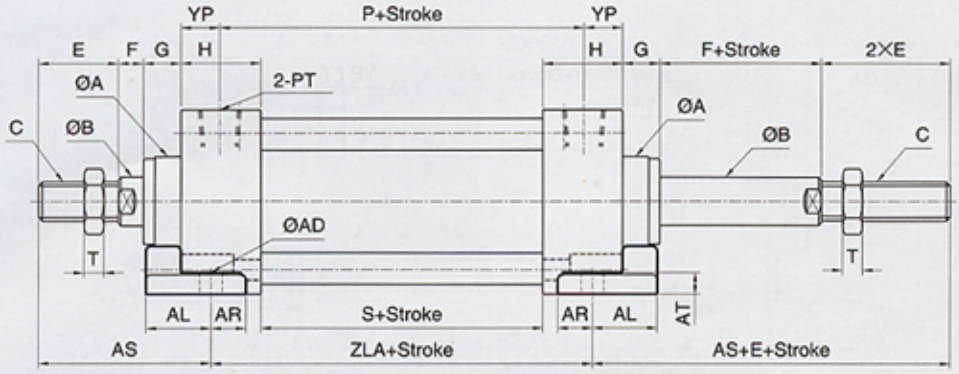

MT(P)B-MT(P)D TYPE																	LA TYPE							
BORE \ SIZE	ØA	ØB	C	E	F	G	H	P	PM	PT	YP	K	T	S	AS	ZAL	ØAD	AH	AL	AN	AR	AT	AX	AY
Ø32	Ø28	Ø12	M10XP1.25	22	10	15	32	61	23	1/8	16	M6XP1.0	8	29	55	77	Ø9	44	22	22	14	8	63	80
Ø40	Ø32	Ø16	M12XP1.25	24	10	15	32	61	23	1/4	16	M6XP1.0	8	29	57	77	Ø12	50	22	25.5	14	8	70	91
Ø50	Ø38	Ø20	M16XP1.5	32	10	15	32	61	23	1/4	16	M6XP1.0	8	29	67	73	Ø12	62	24	31	14	8	83	104
Ø63	Ø38	Ø20	M16XP1.5	32	10	15	32	64	26	3/8	16	M8XP1.25	8	32	69	72	Ø12	76	26	38	14	9	95	116
Ø80	Ø47	Ø25	M20XP1.5	40	14	21	38	68	26	3/8	20	M10XP1.25	9	32	88	82	Ø14	94	33	47	18	12	121	146
Ø100	Ø47	Ø25	M20XP1.5	40	14	21	38	68	26	1/2	20	M10XP1.25	9	32	92	74	Ø14	114	37	57	18	14	140	165

備註:

1.本系列符合ISO國際標準規格。
2.本系列行程超過1500mm(含)以上時,活塞(PM)長度須加倍長(尺寸P,S,ZAL須再加PM尺寸長度乙次)。
3.本系列行程超過2000mm(含)以上時,須加拉桿中間固定座(MPB系列不包含)。

1.ISO registered of standard specification.
2.The series stroke exceed (includes) 1500mm, should redouble length (PM) of piston. (Add twice length PM of size:P,S,ZAL).
3.When this series of stroke exceeds(includes) 2000mm,the fixed base of the pull rod must be added in the middle.(But series MPB not be included)

Series MT(P)-LB

壓鑄鋁合金方型氣壓缸LB架尺寸圖
MT Series LB Dimensional Features(0.99Mpa)

MTB MT(P)B+LB TYPE

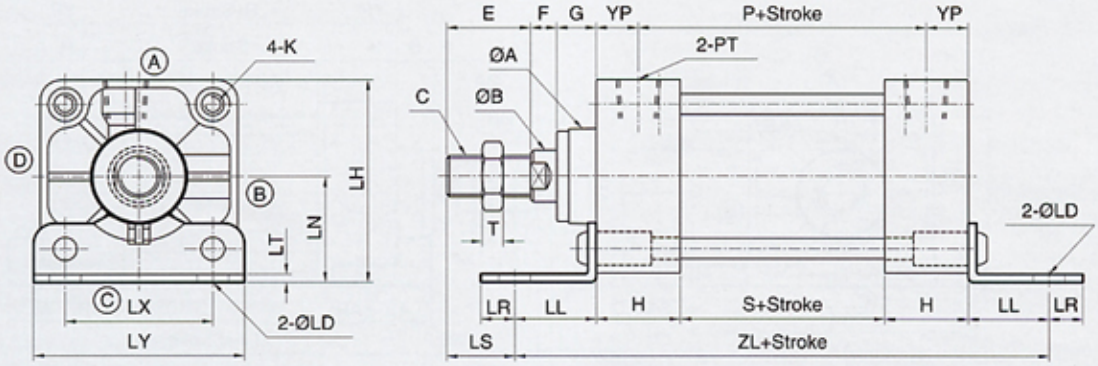

MPD MP(T)D+LB TYPE

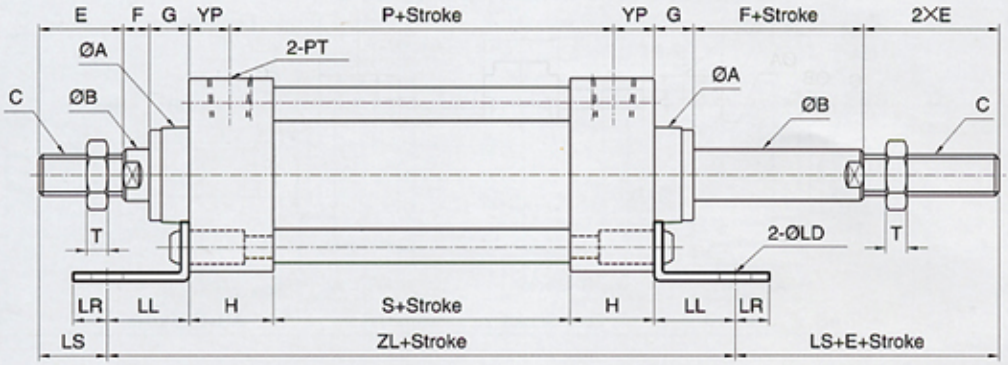

MT(P)B-MT(P)D TYPE																		LB TYPE							
BORE \ SIZE	ØA	ØB	C	E	F	G	H	LS	P	PM	PT	YP	K	T	S	ZL	ØLD	LH	LL	LN	LR	LT	LX	LY
Ø32	Ø28	Ø12	M10XP1.25	22	10	15	32	26.5	61	23	1/8	16	M6XP1.0	8	29	134	Ø9	50	20.5	28	9.5	3.2	33	50
Ø40	Ø32	Ø16	M12XP1.25	24	10	15	32	25.5	61	23	1/4	16	M6XP1.0	8	29	140	Ø12	55	23.5	30	12.5	3.2	36	57
Ø50	Ø38	Ø20	M16XP1.5	32	10	15	32	29	61	23	1/4	16	M6XP1.0	8	29	149	Ø12	67.5	28	36.5	12	3.2	47	68
Ø63	Ø38	Ø20	M16XP1.5	32	10	15	32	26	64	26	3/8	16	M8XP1.25	8	32	158	Ø12	79	31	41	13	3.2	56	80
Ø80	Ø47	Ø25	M20XP1.5	40	14	21	38	45	68	26	3/8	20	M10XP1.25	9	32	168	Ø14	96	30	49	16	4	70	97
Ø100	Ø47	Ø25	M20XP1.5	40	14	21	38	45	68	26	1/2	20	M10XP1.25	9	32	168	Ø14	114	30	57	16	4	84	112

備註:

1.本系列符合ISO國際標準規格。
2.本系列行程超過1500mm(含)以上時,活塞(PM)長度須加倍長(尺寸P,S,ZL須再加PM尺寸長度乙次)。
3.本系列行程超過2000mm(含)以上時,須加拉桿中間固定座(MPB系列不包含)。

1.ISO registered of standard specification.
2.The series stroke exceed (includes) 1500mm, should redouble length (PM) of piston. (Add twice length PM of size:P,S,ZL).
3.When this series of stroke exceeds(includes) 2000mm,the fixed base of the pull rod must be added in the middle.(But series MPB not be included)

ASHUN

壓鑄鋁合金方型氣壓缸TC尺寸圖
MT Series TC Dimensional Features(0.99Mpa)

MTB MTB+TC TYPE

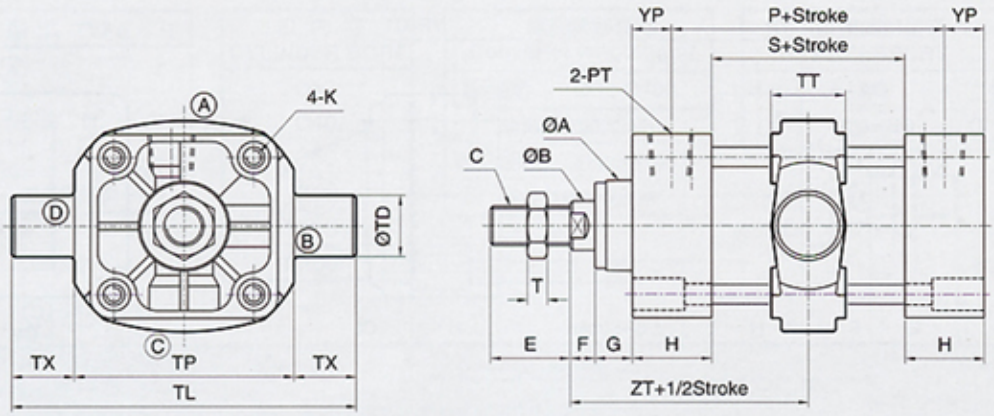

MTD MTD+TC TYPE

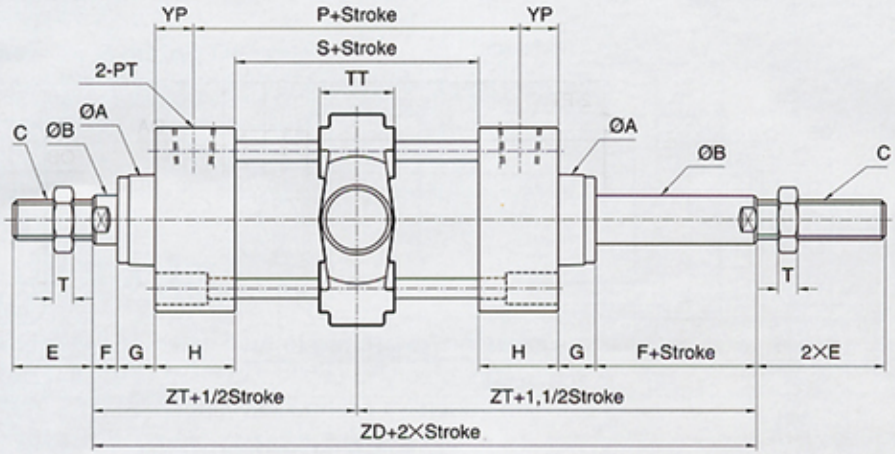

MTB-MTD TYPE																	TC TYPE				
BORE \ SIZE	ØA	ØB	C	E	F	G	H	P	PM	PT	YP	K	T	S	ZT	ZD	TL	TP	TT	ØTD	TX
Ø32	Ø28	Ø12	M10XP1.25	22	10	15	32	61	23	1/8	16	M6XP1.0	8	29	71.5	143	87	55	30	16	16
Ø40	Ø32	Ø16	M12XP1.25	24	10	15	32	61	23	1/4	16	M6XP1.0	8	29	71.5	143	113	63	30	25	25
Ø50	Ø38	Ø20	M16XP1.5	32	10	15	32	61	23	1/4	16	M6XP1.0	8	29	71.5	143	126	76	30	25	25
Ø63	Ø38	Ø20	M16XP1.5	32	10	15	32	64	26	3/8	16	M8XP1.25	8	32	73	146	138	88	30	25	25
Ø80	Ø47	Ø25	M20XP1.5	40	14	21	38	68	26	3/8	20	M10XP1.25	9	32	89	178	164	114	35	25	25
Ø100	Ø47	Ø25	M20XP1.5	40	14	21	38	68	26	1/2	20	M10XP1.25	9	32	89	178	182	132	40	25	25

備註:

1.本系列符合ISO國際標準規格。
2.本系列行程超過1500mm(含)以上時,活塞(PM)長度須加倍長(尺寸P,S,ZT,ZD須再加PM尺寸長度乙次)。
3.MP系列無此TC配件。

1.ISO registered of standard specification.
2.The series stroke exceed (includes) 1500mm, should redouble length (PM) of piston. (Add twice length PM of size:P,S,ZT,ZD).
3.MP series without TC accessories.

Series
MT(P)-CA,CB

壓鑄鋁合金方型氣壓缸CA,CB尺寸圖
MT Series CA,CB Dimensional Features(0.99Mpa)

MTB MT(P)B+CA TYPE

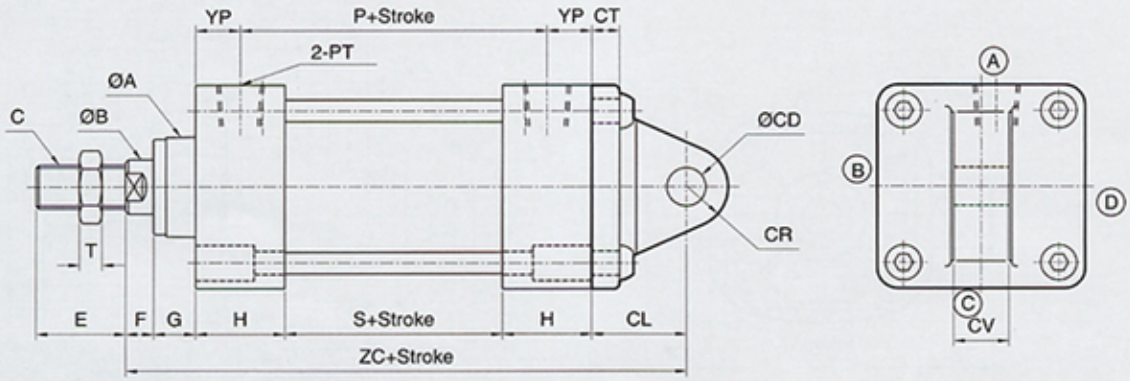

MTB MT(P)B+CB TYPE

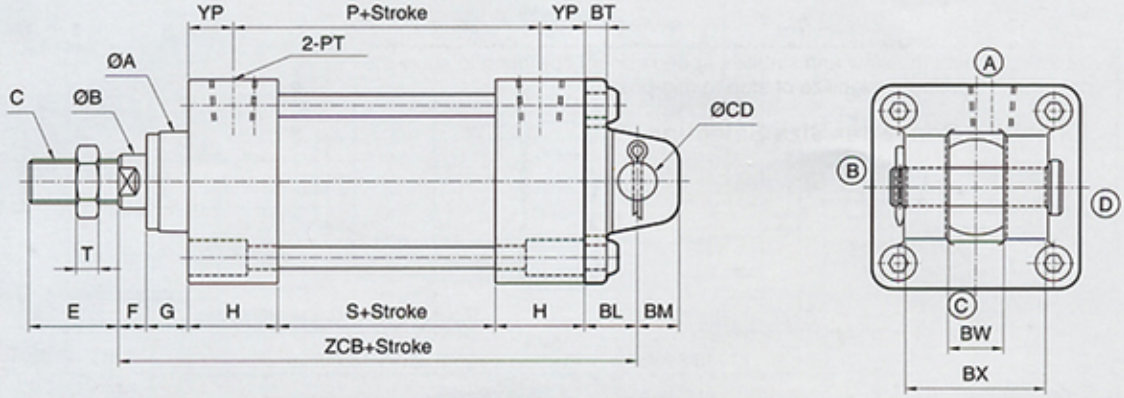

MT(P)B TYPE																	CA TYPE				CB TYPE				
BORE \ SIZE	ØA	ØB	C	E	F	G	H	P	PM	PT	YP	T	S	ZCB	ZC	ØCD	CL	CR	CT	CV	BL	BM	BT	BW	BX
Ø32	Ø28	Ø12	M10XP1.25	22	10	15	32	61	23	1/8	16	8	29	139	139	Ø12	21	14	8	16	21	11	8	16	32
Ø40	Ø32	Ø16	M12XP1.25	24	10	15	32	61	23	1/4	16	10	29	137	152	Ø14	34	14	10	20	19	13	8	20	44
Ø50	Ø38	Ø20	M16XP1.5	32	10	15	32	61	23	1/4	16	8	29	137	152	Ø14	34	15	10	20	19	15	8	20	52
Ø63	Ø38	Ø20	M16XP1.5	32	10	15	32	64	26	3/8	16	8	32	140	155	Ø14	34	15	10	20	19	15	8	20	52
Ø80	Ø47	Ø25	M20XP1.5	40	14	21	38	68	26	3/8	20	9	32	175	191	Ø20	48	20	14	32	32	21	11	32	64
Ø100	Ø47	Ø25	M20XP1.5	40	14	21	38	68	26	1/2	20	9	32	175	191	Ø20	48	20	14	32	32	21	11	32	64

備註:

1.本系列符合ISO國際標準規格。
2.本系列行程超過1500mm(含)以上時,活塞(PM)長度須加倍長(尺寸P,S,ZC,ZCB須再加PM尺寸長度乙次)。
3.本系列行程超過2000mm(含)以上時,須加拉桿中間固定座(MPB系列不包含)。

1.ISO registered of standard specification.
2.The series stroke exceed (includes) 1500mm, should redouble length (PM) of piston. (Add twice length PM of size:P,S,ZC,ZCB).
3.When this series of stroke exceeds(includes) 2000mm,the fixed base of the pull rod must be added in the middle.(But series MPB not be included)

快速索引

QUICK INDEX

MT(P)H- 壓鑄鋁合金方型空油轉換筒
Air Hydro Converter ..... P. 31

MTH MT(P)H+FB TYPE MTH MT(P)H+LB TYPE ..... P. 32

JC- 超薄氣缸系列
Compact Pneumatic Cylinders ..... P. 33

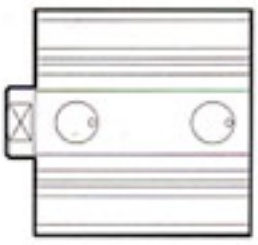

JCB Ø12~Ø25 TYPE JCB Ø32~Ø80 TYPE ..... P. 34

JCBR Ø12~Ø25 TYPE JCBR Ø32~Ø80 TYPE ..... P. 35

ASHUN

壓鑄鋁合金方型空油轉換筒採購指南 Air-Hydro Converter How to order (0.99Mpa)

MTH 63 * 100 + LB

型 式 TYPE	
MTH	
標 準 型	
MPH	
標準無柱型	

缸 內 徑 CYLINDER BORE
Ø32
Ø40
Ø50
Ø63
Ø80
Ø100

轉換筒管長 Converter length(mm)	
霧型鋁管	Ø32-Ø100
最長長度3000mm	
無柱型鋁管	Ø32-Ø100
最長長度2000mm	

缸體固定型式 ACCESSORY		
FB	後法蘭型	
LB	腳座型	

空油轉換筒之使用時機

一般氣壓缸使用時,作動中間位置停止不確實,速度控制無法達到慢而穩定的速度等問題。故可使用空油轉換筒與空油作動缸或低油壓缸相互搭配解決問題,無需使用油壓動力系統,節省成本。(如圖一)

空油轉換筒尺寸之選用

依據使用空油作動缸之內容積,再選用空油轉換筒之尺寸,其內容積相關計算方式如下:

Air-Hydro Converter Working Occasion

Save more cost and without use hydraulic power system. Air/Oil converter system combine the slow and stabilize speed control operation to solve the pneumatic working unstabilize of stop to mid-position.

Air-Hydro Converter Size Selection

Select the Air-Hydro converter size must according to the capacity of cylinder. The capacity of calculate related under:

$$V = d \times d \times \pi \times (L \times 1.5) \times 10^{-3}$$

π : 3.14159

d:空油作動缸活塞半徑Piston bore of working cylinder(mm)

L:空油作動缸作動行程Stroke of working cylinder(mm)

V:空油轉換筒之內容積Capacity of working cylinder(cm^3)

註:空油轉換筒內容積建議應大於作動缸之內容積1.5倍

p.s Suggest the capacity of Air-Hydro converter large 1.5 precentage than working cylinder capacity.

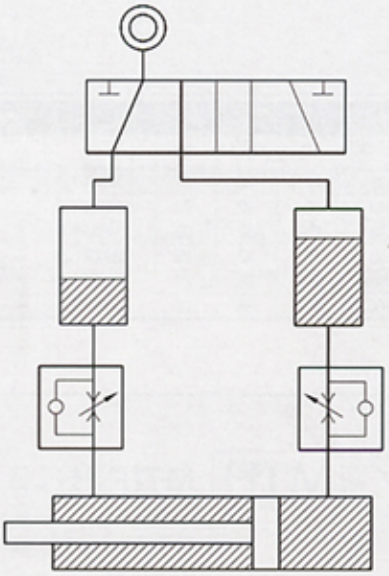

(圖一)

空油轉換筒使用安裝重點:

空油轉換筒油面上昇速度最大以不超過150mm/sec為宜

空油轉換筒之安裝位置必須為垂直方向,且必須高於作動缸。

Air-Hydro SETTING

The Air-Hydro converter of oil-surface soar speed suggest unexceed 150mm/sec.

The Air-Hydro converter setting position must hight than working cylinder and setting vertical direction.

壓鑄鋁合金方型氣壓缸特性資料 Specification

氣缸內徑(Bore sizes of cylinder)(mm)	Ø32	Ø40	Ø50	Ø63	Ø80	Ø100
工作媒體(Power fluid)	已過濾乾淨之液壓油 Filtered oil					
使用壓力範圍 (The range of pressure)(kg/cm^2)	0.5~9.9kg					
標準油筒長度 (Standard length)(mm)	作動缸之行程X1.5倍					
缸體材質 (Material of converter barrel)	鋁合金管 Anodised alumininm alloy					
使用溫度範圍(The range of temperature)(°C)	-10°~+60°C					

Series
MT(P)H-FB,LB

鋁合金方型空油轉換筒FB尺寸圖
Air-Hydro Converter FB,LB Dimensional Features

MTH MT(P)H+FB TYPE

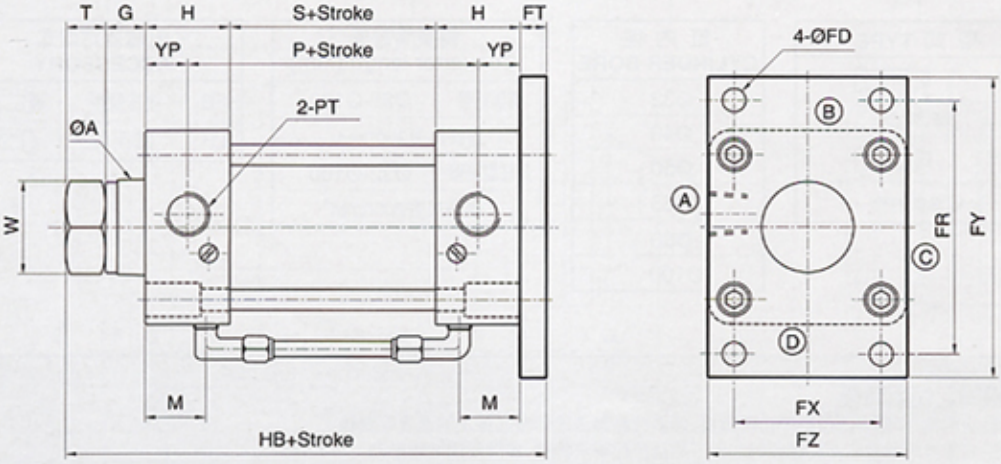

BORE \ SIZE	MT(P)H- TYPE											FB TYPE					
	G	H	M	K	P	PT	YP	T	W	S	HB	ØFD	FT	FR	FX	FY	FZ
Ø32	10.5	32	23	M6XP1.0	61	1/8	16	10	25	30	124.5	Ø7	10	58	33	72	47
Ø40	10.5	32	23	M6XP1.0	61	1/4	16	10	35	30	124.5	Ø7	10	70	36	84	52
Ø50	10.5	32	23	M6XP1.0	61	1/4	16	20	41	30	134.5	Ø9	10	86	47	104	65
Ø63	15	32	23	M8XP1.25	64	3/8	16	20	41	30	139	Ø9	10	98	56	116	76
Ø80	16.5	38	26	M10XP1.25	68	3/8	20	20	46	30	158.5	Ø12	16	119	70	143	95
Ø100	16.5	38	26	M10XP1.25	68	1/2	20	20	46	30	158.5	Ø12	16	138	84	162	115

鋁合金方型空油轉換筒LB尺寸圖
Air-Hydro Converter FB,LB Dimensional Features

MTH MT(P)H+LB TYPE

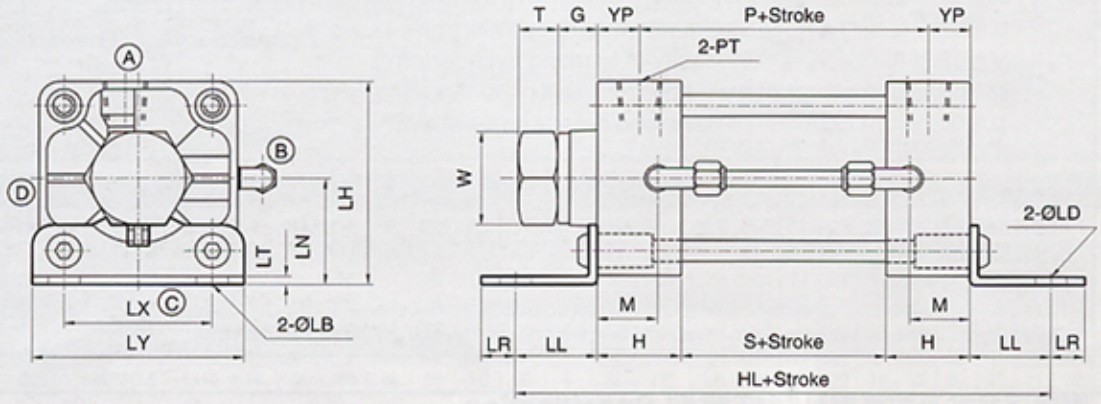

BORE \ SIZE	MT(P)H- TYPE											LB TYPE							
	G	H	M	K	P	PT	YP	T	W	S	HL	ØLD	LH	LN	LL	LR	LT	LX	LY
Ø32	10.5	32	23	M6XP1.0	61	1/8	16	10	25	30	135	Ø9	50	28	20.5	9.5	3.2	33	50
Ø40	10.5	32	23	M6XP1.0	61	1/4	16	10	35	30	141	Ø12	55	30	23.5	12.5	3.2	36	57
Ø50	10.5	32	23	M6XP1.0	61	1/4	16	20	41	30	150	Ø12	67.5	36.5	28	12	3.2	47	68
Ø63	15	32	23	M8XP1.25	64	3/8	16	20	41	30	156	Ø12	79	41	31	13	3.2	56	80
Ø80	16.5	38	26	M10XP1.25	68	3/8	20	20	46	30	166	Ø14	96	49	30	16	4	70	97
Ø100	16.5	38	26	M10XP1.25	68	1/2	20	20	46	30	166	Ø14	114	57	30	16	4	84	112

ASHUN

超薄氣缸採購指南 Compact Pneumatic Cylinders How to order (0.99Mpa)

JCB R Ø50 * Ø20 * 20ST + Y + Es2 + DM

型 式 TYPE	
JCB	標準型
JCSA	單動常入型
JCSB	單動常出型

無記號	不附磁石
R	內附磁石

缸內徑 CYLINDER BORE	軸心 標準	行 程 STROKE JCB	行 程 STROKE JCBR
Ø12	Ø06	10,15,20,25,30	5,10,15,20,25,30
Ø16	Ø08	5,10,15,20,25,30	5,10,15,20,25,30
Ø20	Ø10	5,10,15,20,25,30 35,40,45,50	5,10,15,20,25,30 35,40,45,50
Ø25	Ø12		
Ø32	Ø16	5,10,15,20,25,30 35,40,45,50,75,100	5,10,15,20,25,30 35,40,45,50,75,100
Ø40	Ø16		
Ø50	Ø20	10,15,20,25,30 35,40,45,50,75,100	10,15,20,25,30 35,40,45,50,75,100
Ø63	Ø20		
Ø80	Ø25		

軸心固定型式 ACCESSORY		
YP	Y型PIN	
I	I型接頭	
KG	浮動接頭	
PHS	典雅接頭	
T	T型接頭	
H	標準接頭	

磁簧開關 記號	數量
無記號	無
Es1	1個
Es2	2個

無記號	軸心內牙
DM	軸心外牙

超薄氣缸特性資料 Specification

氣缸內徑(Bore sizes of cylinder)(mm)	Ø12	Ø16	Ø20	Ø25	Ø32	Ø40	Ø50	Ø63	Ø80
工作媒體(Power fluid)	過濾乾淨之壓縮空氣 Filtered air								
使用壓力範圍 (The range of pressure)(kg/cm²)	0.5-9.9(kg/cm²)(Ø12,Ø16-0.7-9.9kg/cm²)								
使用溫度範圍 (The range of temperature)(°c)	-10~+60(°C)								
使用速度範圍 (The range of speed)(mm/sec)	3~300(mm/sec)								

超薄氣缸結構圖 Inside Structure and Parts List

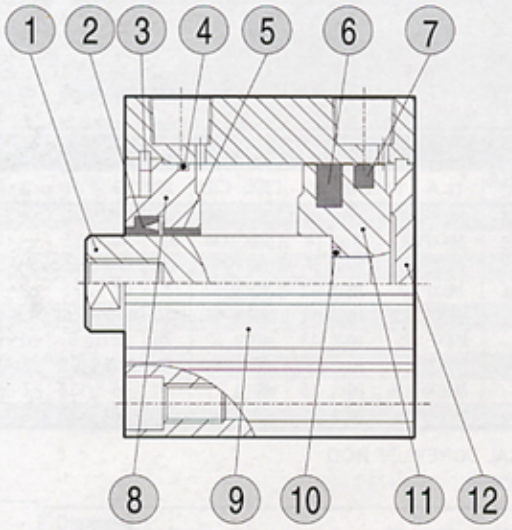

NO	零件名 Part mane		數量 Quantity	NO	零件名 Part mane		數量 Quantity	NO	零件名 Part mane		數量 Quantity
1	活塞桿	Piston rod	1	5	乾式軸承	Bust	1	9	氣缸本體	Cylinder tube	1
2	軸用封環	Rod packing	1	6	磁石	Magnet	1	10	O型環	Gasket	1
3	C型扣環	Stop ring	1	7	橡膠活塞環	Piston packing	1	11	活塞本體	Piston	1
4	O型環	Gasket	1	8	前蓋	Rod cover	1	12	後蓋	End cover	1

超薄缸標準型尺寸圖
JC Converter Dimensional Features(0.99Mpa)

JCB Ø12~Ø25 TYPE

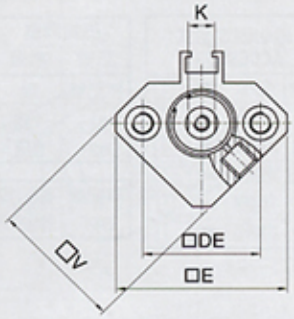

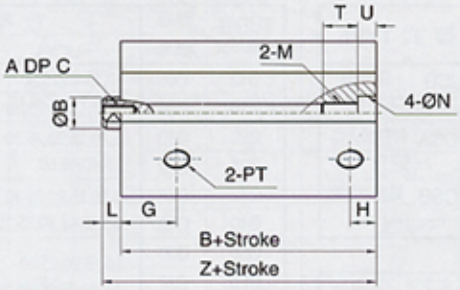

JCB Ø32~Ø80 TYPE

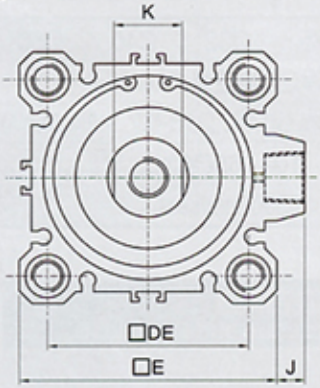

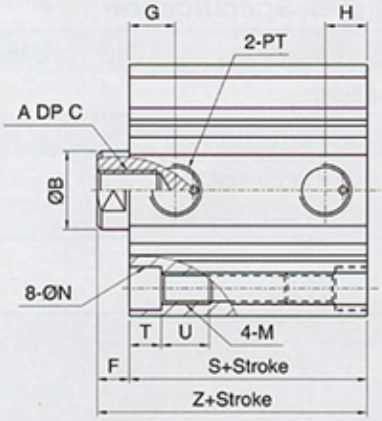

備註：1.PM為本系列活塞長度。　1.PM:Piston length

JCB TYPE

BORE \ SIZE	A	ØB	C	□DE	□E	F	G	H	J	K	M	N	PM	PT	S	T	U	V	Z
Ø12	M3XP0.5	6	6	22	32	3.5	10.5	5	—	5	M4XP0.7	6.5	5	M5XP0.8	17	3.5	6.5	25	20.5
Ø16	M4XP0.7	8	8	28	38	3.5	10	5.5	—	6	M4XP0.7	6.5	5	M5XP0.8	18.5	3.5	6.5	29	22
Ø20	M5XP0.8	10	7	36	46.8	4.5	10.5	5.5	—	8	M6XP1.0	9.0	6	M5XP0.8	19.5	7	10	36	24
Ø25	M6XP1.0	12	12	40	52	5	11	5.5	—	10	M6XP1.0	9.0	7	M5XP0.8	22.5	7	10	40	27.5
Ø32	M8XP1.25	16	13	34	45	7	10.5	7.5	4.5	14	M6XP1.0	9.0	7	PT1/8	23	7	10	—	30
Ø40	M8XP1.25	16	13	40	52	7	12	8	5	14	M6XP1.0	9.0	9	PT1/8	29.5	7	10	—	36.5
Ø50	M10XP1.5	20	15	50	64	8	11.5	10.5	7	17	M8XP1.25	11	9	PT1/4	30.5	8	12	—	38.5
Ø63	M10XP1.5	20	15	60	77	8	15	10.5	7	17	M10XP1.5	14	11	PT1/4	36	10.5	9.5	—	44
Ø80	M16XP2.0	25	21	77	98	10	16	12.5	6	22	M12XP1.75	17.5	12.5	PT3/8	43.5	13.5	11.5	—	53.5

VERTICAL SCREW OF ROD
外牙型尺寸表

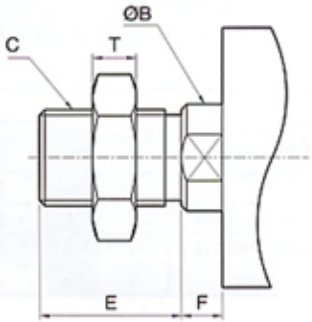

Diameter (mm)	B	C	E	F	K	W	T
Ø12	6	M5XP0.8	10.5	3.5	5	8	4
Ø16	8	M6XP1.0	12	3.5	6	10	5
Ø20	10	M8XP1.25	14	4.5	8	14	5
Ø25	12	M10XP1.25	17.5	5	10	17	8
Ø32	16	M14XP1.5	23.5	5	14	22	8
Ø40	16	M14XP1.5	23.5	5	14	22	8
Ø50	20	M18XP1.5	28.5	5	18	27	8
Ø63	20	M18XP1.5	28.5	5	18	27	8
Ø80	25	M22XP1.5	33.5	10	22	32	12

ASHUN

超薄缸附磁石標準型尺寸圖
JCBR Series Dimensional Features(0.99Mpa)

JCBR Ø12~Ø25 TYPE

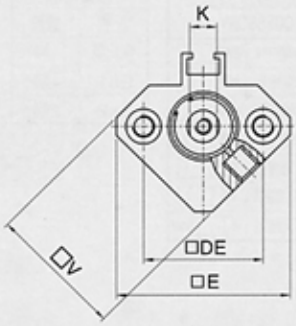

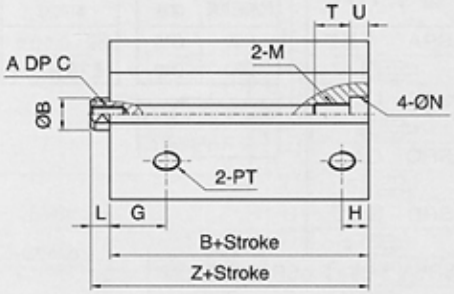

JCBR Ø32~Ø80 TYPE

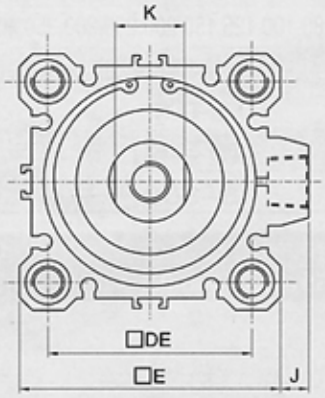

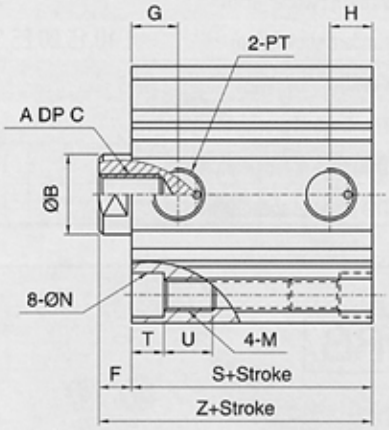

備註：1.PM為本系列活塞之長度。　1.PM:Piston length

JCB TYPE

BORE \ SIZE	A	ØB	C	□DE	□E	F	G	H	J	K	M	N	PM	PT	S	T	U	V	Z
Ø12	M3XP0.5	6	6	22	32	3.5	10.5	5	—	5	M4XP0.7	6.5	15	M5XP0.8	28	3.5	6.5	25	31.5
Ø16	M4XP0.7	8	8	28	38	3.5	10	5.5	—	6	M4XP0.7	6.5	15	M5XP0.8	30.5	3.5	6.5	29	34
Ø20	M5XP0.8	10	7	36	46.8	4.5	10.5	5.5	—	8	M6XP1.0	9.0	17	M5XP0.8	31.5	7	10	36	36
Ø25	M6XP1.0	12	12	40	52	5	11	5.5	—	10	M6XP1.0	9.0	17	M5XP0.8	32.5	7	10	40	37.5
Ø32	M8XP1.25	16	13	34	45	7	10.5	7.5	4.5	14	M6XP1.0	9.0	17	PT1/8	33	7	10	—	40
Ø40	M8XP1.25	16	13	40	52	7	12	8	5	14	M6XP1.0	9.0	19	PT1/8	39.5	7	10	—	46.5
Ø50	M10XP1.5	20	15	50	64	8	11.5	10.5	7	17	M8XP1.25	11	19	PT1/4	40.5	8	12	—	48.5
Ø63	M10XP1.5	20	15	60	77	8	15	10.5	7	17	M10XP1.5	14	21	PT1/4	46	10.5	9.5	—	54
Ø80	M16XP2.0	25	21	77	98	10	16	12.5	6	22	M12XP1.75	17.5	22.5	PT3/8	53.5	13.5	11.5	—	63.5

VERTICAL SCREW OF ROD
外牙型尺寸表

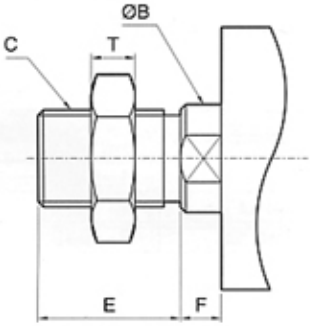

Diameter (mm)	B	C	E	F	K	W	T
Ø12	6	M5XP0.8	10.5	3.5	5	8	4
Ø16	8	M6XP1.0	12	3.5	6	10	5
Ø20	10	M8XP1.25	14	4.5	8	14	5
Ø25	12	M10XP1.25	17.5	5	10	17	8
Ø32	16	M14XP1.5	23.5	5	14	22	8
Ø40	16	M14XP1.5	23.5	5	14	22	8
Ø50	20	M18XP1.5	28.5	5	18	27	8
Ø63	20	M18XP1.5	28.5	5	18	27	8
Ø80	25	M22XP1.5	33.5	10	22	32	12

SR- 小型圓型氣缸系列 Hexagon Bronze Body Air Cylinders Series

P. 36

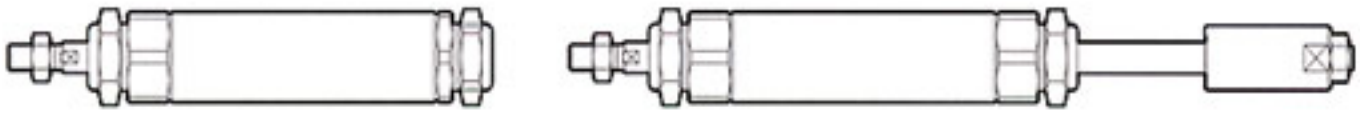

SRB SR+B (標準型) TYPE
SRD SR+D (雙軸型) TYPE
SRD SRD+AST (雙軸型附可調帽) TYPE
P. 37

SRA SRA (後平) +FA TYPE
SRD SRD+FA TYPE
P. 38

SRB SRB+LB (架) TYPE
SRD SRD+LB (架) TYPE
P. 39

SRC SRC TYPE
SRCB SRCB TYPE
P. 40

Series SR □

小型圓型氣缸採購指南 HA Series Pneumatic How to order (0.99Mpa)

SRC R Ø30 * Ø12 * 50ST LB + Y + Es2

型 式 TYPE	
SRA	平尾型
SRB	LB型
SRC	CA型
SRD	雙軸型
SRSA	單動常入型
SRSB	單動常出型

缸內徑 CYLINDER BORE	軸心 標準
Ø20	Ø10
Ø30	Ø12

無記號	不附磁石
R	內附磁石

行 程 STROKE	
鋁管	Ø20-Ø30
最大衝程1.9m	

缸體固定型式 ACCESSORY	
FA	前法蘭型
FB	後法蘭型
LB	腳座型

軸心固定型式 ACCESSORY	
YP	Y附PIN
I	I型接頭
KG	浮動接頭
PHS	魚眼接頭
T	T型接頭
H	焊接接頭
A	可調螺帽

磁簧開關	
記號	數量
無記號	無
Es1	1個
Es2	2個

小型圓型氣缸特性資料 Specification

氣缸內徑(Bore sizes of cylinder)(mm)	Ø20	Ø30
標準庫存行程(Standard stroke)(mm)	10,15,20,25,30,35,40,50,60,75,80,100,125,150,200,250,300,350,400,450,500,550,600	
工作媒體(Power fluid)	低油壓或過濾乾淨之壓縮空氣 Filtered air or hydraulic oil	
使用壓力範圍 (The range of pressure)(kg/cm²)	0.5-9.9	
使用溫度範圍 (The range of temperature)(°c)	-10~+60	
使用速度範圍 (The range of speed)(mm/sec)	3~300	

小型圓型氣缸結構圖 Inside Structure and Parts List

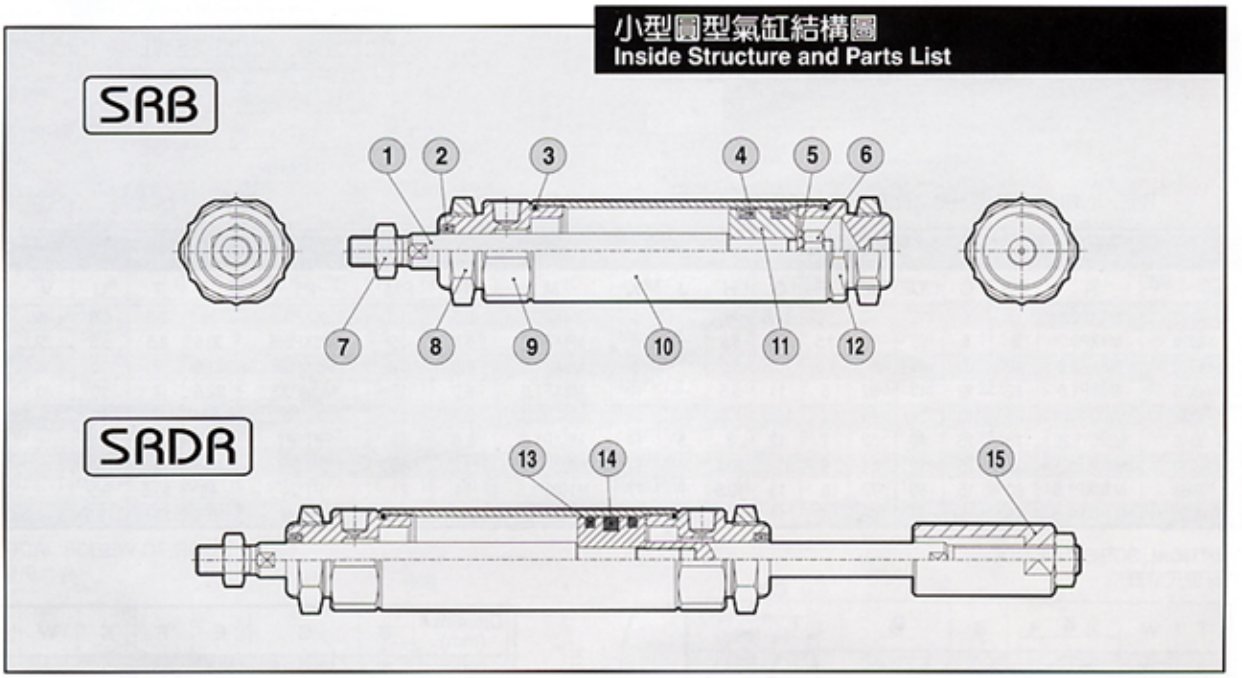

NO	零件名 Part mane		數量 Quantity	NO	零件名 Part mane		數量 Quantity	NO	零件名 Part mane		數量 Quantity
1	活塞桿	Piston rod	1	6	螺帽	Nut	1	11	活塞本體	Piston	1
2	軸用封環	Rod packing	1	7	軸心螺帽	Rod nut	1	12	後蓋	End cover	1
3	O型環	Gasket	2	8	前蓋螺帽	Cover nut	2	13	橡膠活塞環	Piston packing	2
4	橡膠活塞環	Piston packing	2	9	前蓋	Rod cover	1	14	磁石	Magnet	1
5	彈簧華司	Spring washer	1	10	氣缸本體	Cylinder tube	1	15	可調螺帽	Foward nut	1

ASHUN

小型圓型氣缸LB型尺寸圖
SR Series Dimensional Features(0.99Mpa)

SRB SR+B(標準型) TYPE

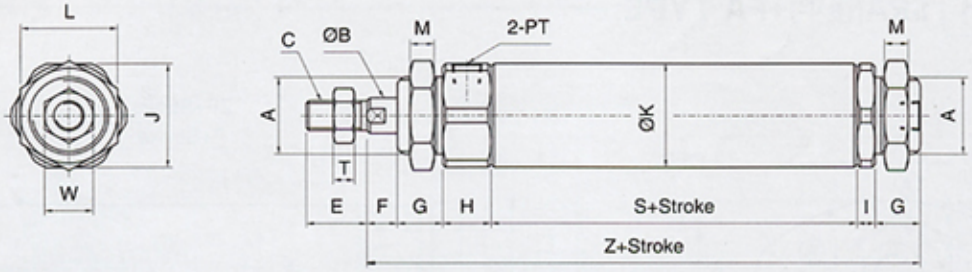

SRD SR+D(雙軸型) TYPE

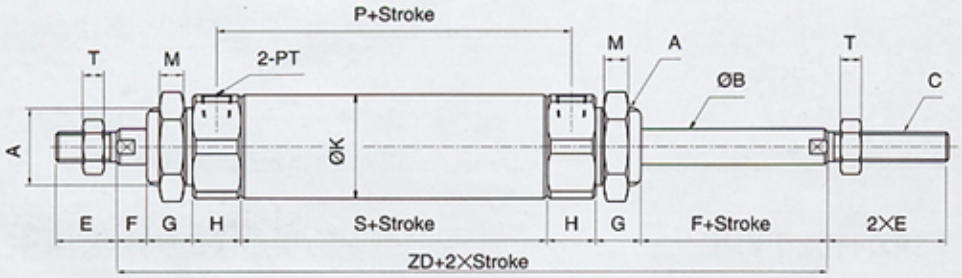

SRD SRD+AST(雙軸型附可調螺帽) TYPE

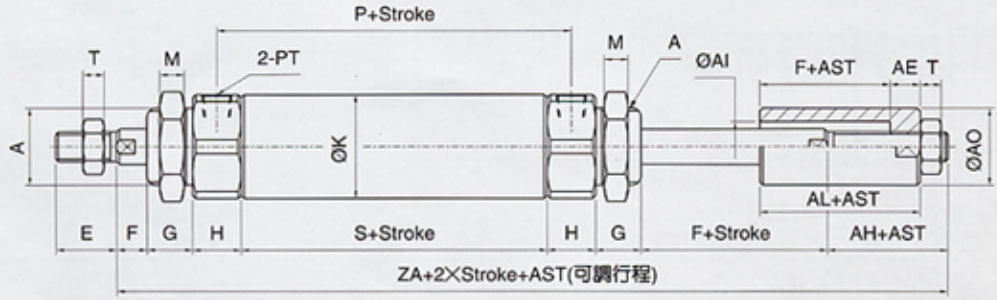

SRB-SRD TYPE																							A(可調行程) TYPE			
BORE \ SIZE	A	B	C	E	F	G	H	I	J	K	L	M	P	PM	PT	W	T	S	Z	ZA	ZD	AH	AE	AI	AO	AL
Ø20	M20XP1.5	10	M8XP1.25	20	10	12	15	6	25	25	26	8	49	12	PT1/8	14	6	34	89	128	108	20	10	13	20	20
Ø30	M26XP1.5	12	M10XP1.25	20	10	15	16	6	35	35	32	8	61	23	PT1/8	16	8	45	107	147	127	20	12	18	25	22

備註：

1.AST 為客戶指定之可調行程。
2.PM 為本系列活塞長度。
3.SR20規格，如加磁石(R)時，PM長度變更為20mm

1.AST:Adjustable stroke by customer assigment.
2.PM:Piston length
3.PM length of SR20 type will be 20mm when add to magnet(R).

小型圓型氣缸FA板尺寸圖
SR Series FA Dimensional Features(0.99Mpa)

SRA SRA(後平)+FA TYPE

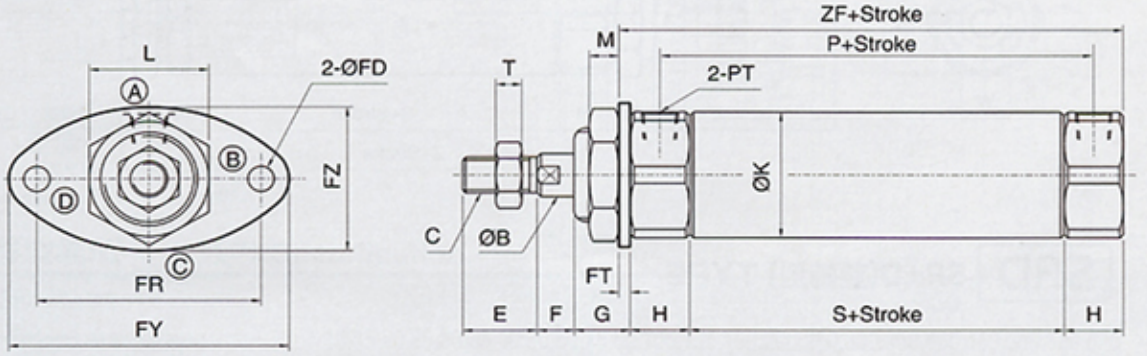

SRD SRD+FA TYPE

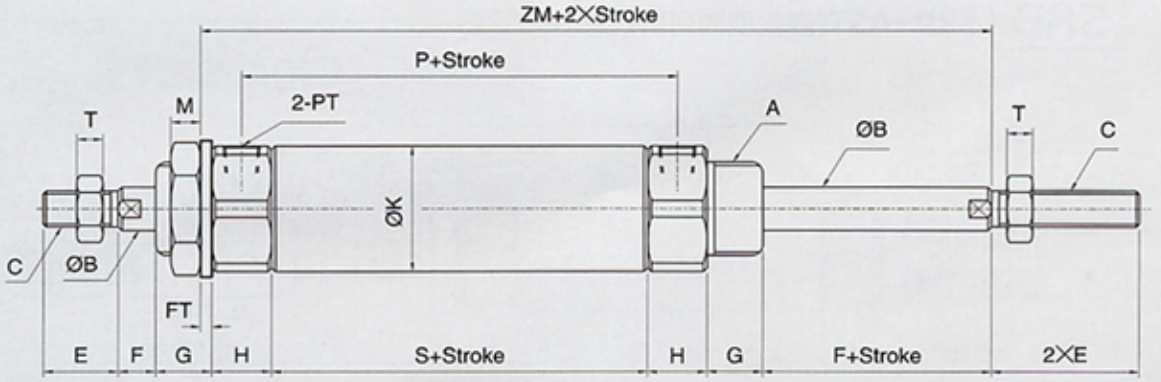

SRA-SRD TYPE																		FA TYPE				
BORE \ SIZE	A	ØB	C	E	F	G	H	K	L	M	P	PM	PT	T	S	ZF	ZM	ØFD	FT	FR	FY	FZ
Ø20	M20XP1.5	10	M8XP1.25	20	10	12	15	25	26	8	49	12	PT 1/8	6	34	67	89	7	3	60	75	40
Ø30	M26XP1.5	12	M10XP1.25	20	10	15	16	35	32	8	61	23	PT 1/8	8	45	80	105	7	3	60	75	40

備註：

1.PM 為本系列活塞長度。
2.SR20規格，如加磁石(R)時，PM長度變更為20mm

1.PM:Piston length
2.PM length of SR20 type will be 20mm when add to magnet(R).

小型圓型氣缸LB架尺寸圖
SR Series LB Dimensional Features(0.99Mpa)

SRB SRB+LB (架) TYPE

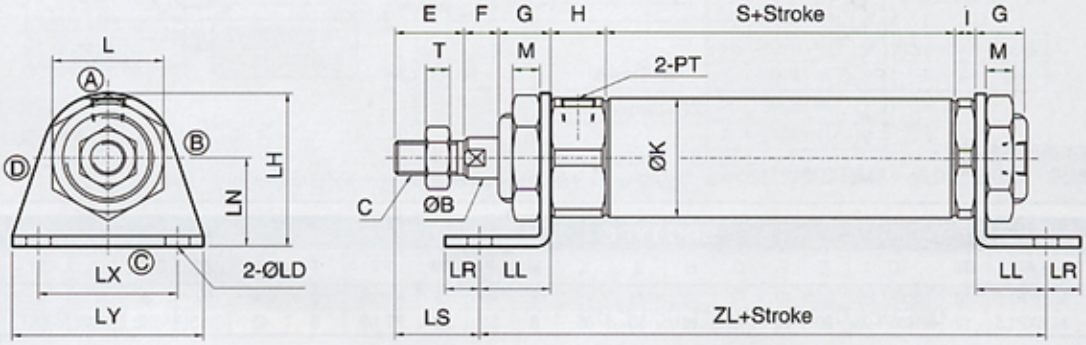

SRD SRD+LB (架) TYPE

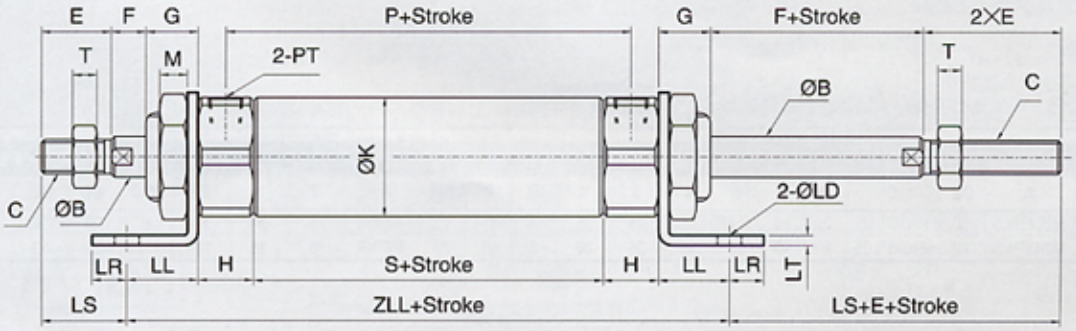

SRB-SRD TYPE																				LB TYPE							
BORE \ SIZE	ØB	C	E	F	G	H	I	K	L	LS	M	P	PM	PT	M	T	S	ZL	ZLL	ØLD	LH	LN	LL	LR	LT	LX	LY
Ø20	10	M8XP1.25	20	10	12	15	6	25	26	21.5	8	49	12	1/8	8	6	34	99	108	7	41	23	22	8	3	40	55
Ø30	12	M10XP1.25	20	10	15	16	6	35	32	24.5	8	61	23	1/8	8	8	45	111	121	7	45	26	22	8	3	40	55

備註：

1.PM 為本系列活塞長度。
2.SR20規格，如加磁石(R)時，PM長度變更為20mm

1.PM:Piston length
2.PM length of SR20 type will be 20mm when add to magnet(R).

Series
SR-C,CB

小型圓型氣缸CA,CB型尺寸圖
SR Series CA,CB Dimensional Features(0.99Mpa)

SRC SRC TYPE

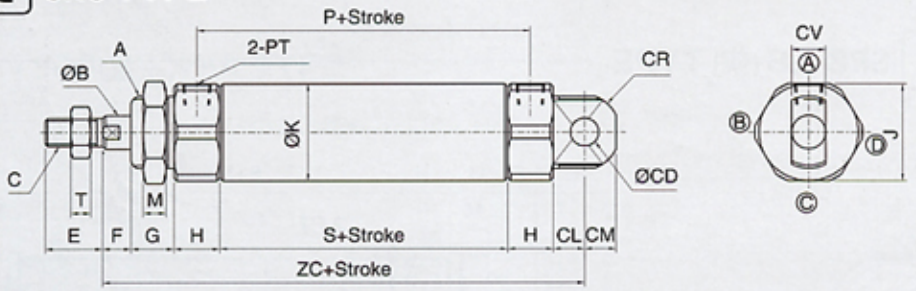

備註：
1.PM 為本系列活塞長度。
2.SR20規格，如加磁石(R)時，PM長度變更為20mm

1.PM:Piston length
2.PM length of SR20 type will be 20mm when add to magnet(R).

SRC TYPE																	CA TYPE				
BORE \ SIZE	A	ØB	C	E	F	G	H	J	K	M	P	PM	PT	T	S	ZC	ØCD	CL	CM	CV	CR
Ø20	M20XP1.5	10	M8XP1.25	20	10	12	15	25	25	8	49	12	PT 1/8	6	34	97	8	11	9	10	10
Ø30	M26XP1.5	12	M10XP1.25	20	10	15	16	35	35	8	61	23	PT 1/8	8	45	113	10	11	11	12	14

SRCB SRCB TYPE

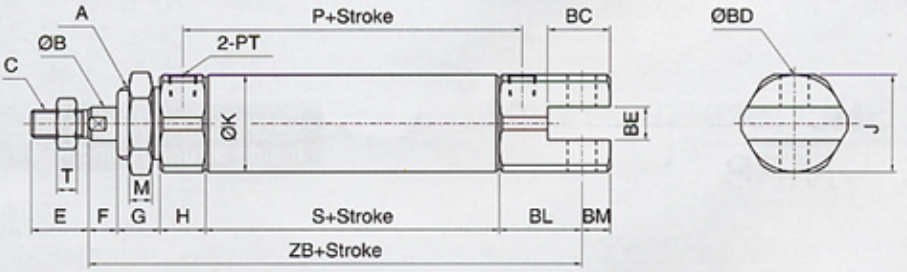

備註：
1.PM 為本系列活塞長度。
2.SR20規格，如加磁石(R)時，PM長度變更為20mm

1.PM:Piston length
2.PM length of SR20 type will be 20mm when add to magnet(R).

SRCB TYPE																	CB TYPE				
BORE \ SIZE	A	ØB	C	E	F	G	H	J	K	M	P	PM	PT	T	S	ZB	ØBD	BC	BE	BL	BM
Ø20	M20XP1.5	10	M8XP1.25	20	10	12	15	25	25	8	49	12	PT 1/8	6	34	96	8	20	10	25	10
Ø30	M26XP1.5	12	M10XP1.25	20	10	15	16	35	35	8	61	23	PT 1/8	8	45	115	10	22	12	29	10

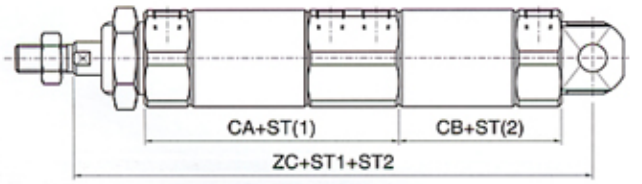

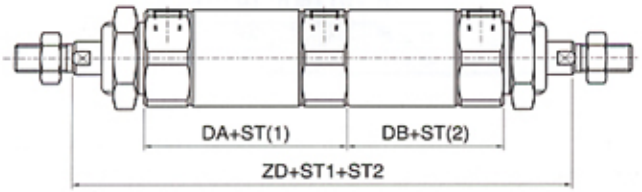

SR2S- 尺寸圖 行程二段式 Multiple position cylinders

SR2C- 尺寸圖 倍力缸 Tandem cylinders

BORE \ SIZE	CA	CB	ZC
Ø20	84	49	166
Ø30	98	61	195

SR2D- 尺寸圖 雙出軸型 Multiple position cylinders

BORE \ SIZE	DA	DB	ZD
Ø20	64	49	157
Ø30	77	61	188

MR- 圓型氣缸系列 Aluminium Alloy Body Cylinders

P.41

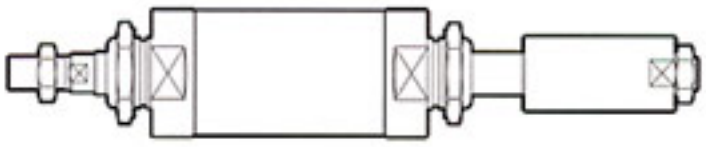

MRC MR+C (標準型) TYPE
MRD MR+D (雙軸型) TYPE
MRD MRD+AST (雙軸型附可調帽) TYPE
P. 42

MRA MRA (後平) +FA TYPE
MRD MRD+FA TYPE
P. 43

MRC MRC+LB (架) TYPE
MRD MRD+LB (架) TYPE
P. 44

ASHUN

圓型氣缸採購指南 Aluminium Alloy Cylinder How to order (0.99Mpa)

MRC R Ø50 * Ø20 * 100ST LB + Y + PPV + Es2

型 式 TYPE	
MRA	平尾型
MRC	CA型
MRD	雙軸型

缸內徑 CYLINDER BORE	軸心 標準
Ø40	Ø16
Ø50	Ø20
Ø63	Ø20

無記號	不附磁石
R	內附磁石

行 程 STROKE	
缸管	Ø40-Ø63
最大衝程2.9米	

缸體固定型式 ACCESSORY	
FA	前法蘭型
FB	後法蘭型
LB	腳座型

缸心固定型式 ACCESSORY	
Y	Y型接頭
YP	Y附PIN
I	I型接頭
KG	浮動接頭
PHS	魚眼接頭
T	T型接頭
H	焊套接頭
A	可調螺帽

磁簧開關	
記號	數量
無記號	無
Es1	1個
Es2	2個

PPV	附緩衝
無記號	無

圓型氣缸特性資料 Specification

氣缸內徑(Bore sizes of cylinder)(mm)	Ø40	Ø50	Ø63
標準庫存行程(Standard stroke)(mm)	25,30,50,75,80,100,120,150,200		
工作媒體(Power fluid)	低油壓或過濾乾淨之壓縮空氣 Filtered air or hydraulic oil		
使用壓力範圍 (The range of pressure)(kg/cm²)	0.5-9.9		
使用溫度範圍 (The range of temperature)(°c)	-10~+60		
使用速度範圍 (The range of speed)(mm/sec)	3~300		
緩衝行程(Cushion stroke)(mm)	17	25	25

圓型氣缸結構圖 Inside Structure and Parts List

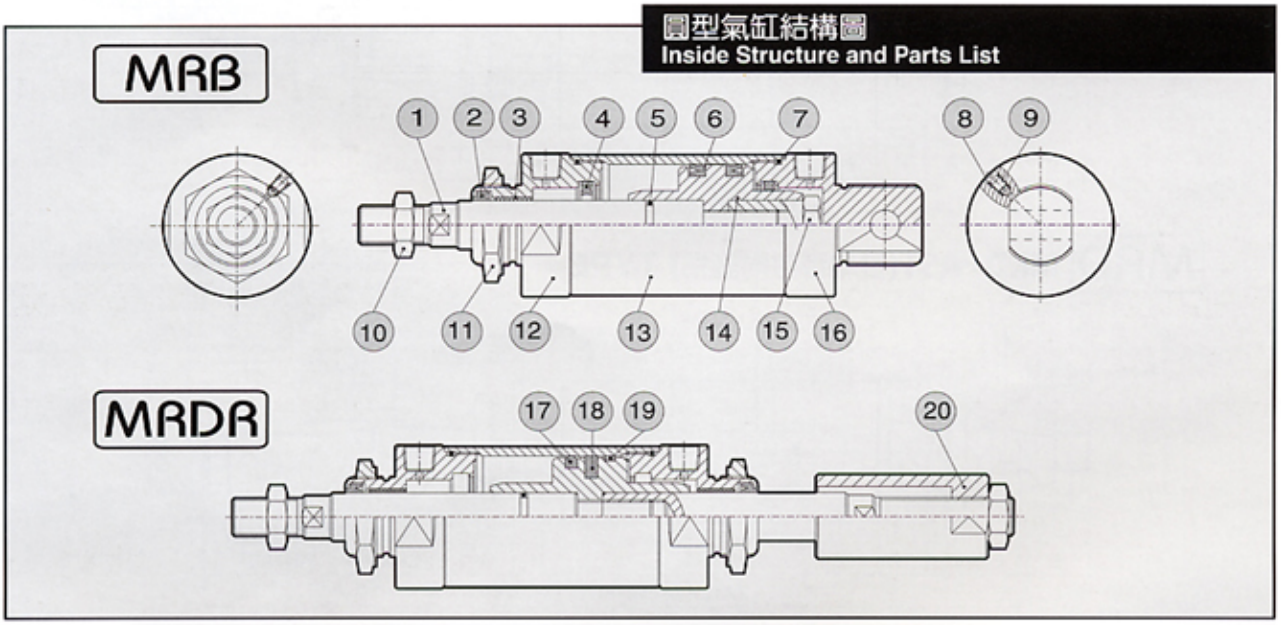

NO	零件名	Part mane	數量 Quantity	NO	零件名	Part mane	數量 Quantity	NO	零件名	Part mane	數量 Quantity
1	活塞桿	Piston rod	1	8	O型環	Gasket	2	15	螺帽	Nut	1
2	軸用封環	Rod packing	1	9	緩衝針	Cushion needle	2	16	後蓋	End cover	1
3	乾式軸承	Oilless bearing	1	10	軸心螺帽	Rod nut	1	17	橡膠活塞環	Piston packing	1
4	緩衝橡皮	Cushion packing	2	11	前蓋螺帽	Cover nut	1	18	磁石	Magnet	1
5	O型環	Gasket	2	12	前蓋	Rod cover	1	19	耐磨環	Wearing ring	1
6	橡膠活塞環	Piston packing	2	13	氣缸本體	Cylinder tube	1	20	可調螺帽	Foward nut	1
7	O型環	Gasket	1	14	活塞本體	Piston	1				

Series
MRC, MRD

圓型氣缸CA型,雙軸型尺寸圖
MR Converter CA Dimensional Features(0.99Mpa)

MRC MR+C(標準型) TYPE

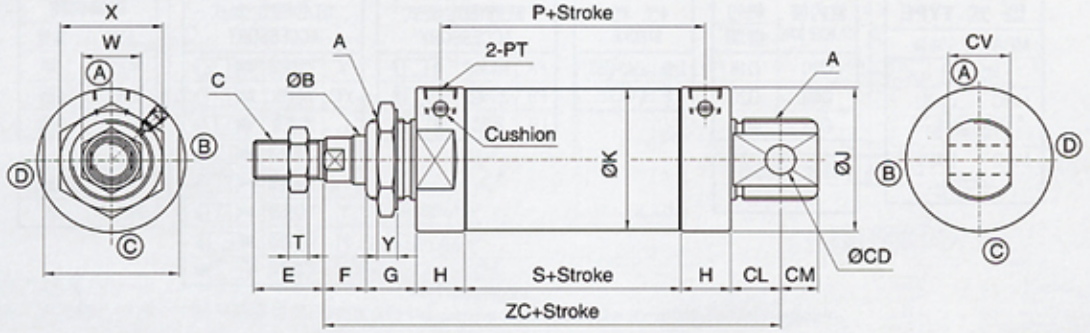

MRC TYPE																			CA TYPE			
BORE \ SIZE	A	B	C	E	F	G	H	ØJ	ØK	P	PM	PT	T	W	S	X	Y	ZC	ØCD	CL	CM	CV
Ø40	M33XP2.0	16	M14XP1.5	28	12	20	20	48	47	76	30	PT1/4	8	22	56	41	8	146	Ø10	18	12	20
Ø50	M33XP2.0	20	M16XP1.5	28	17	20	20	59	58	76	30	PT1/4	8	23.5	56	41	8	153	Ø12	20	15	25
Ø63	M40XP2.0	20	M16XP1.5	28	17	25	20	72	71	80	30	PT1/4	8	23.5	60	55	15	162	Ø16	20	15	25

MRD MR+D(雙軸型) TYPE

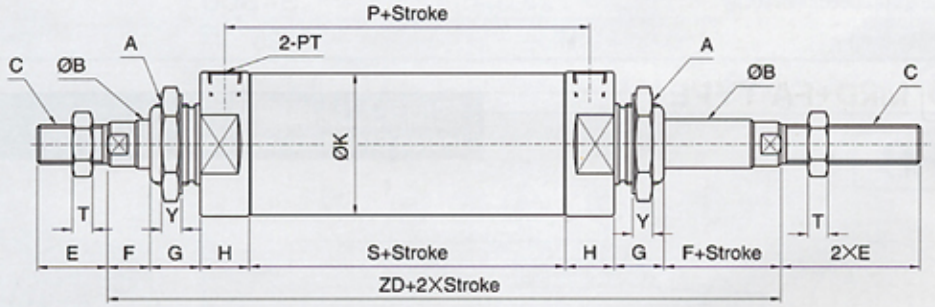

MRD MRD+AST(雙軸型可附調帽) TYPE

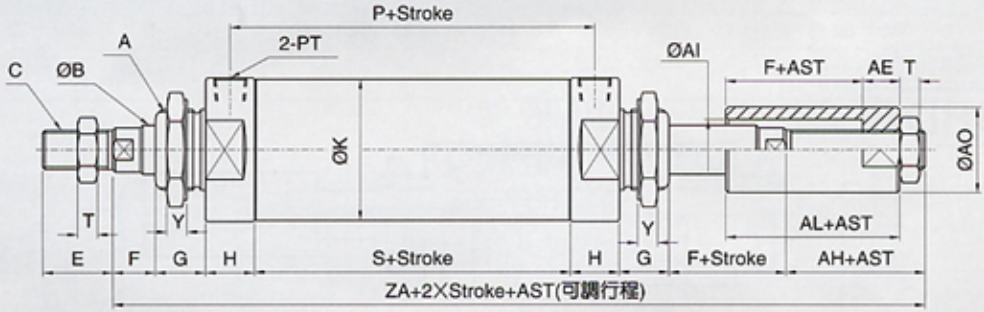

MRD -TYPE																			A(可調行程) TYPE			
BORE \ SIZE	A	B	C	E	F	G	H	ØJ	ØK	P	PM	PT	T	S	Y	ZA	ZD	AH	AE	ØAI	ØAO	AL
Ø40	M33XP2.0	16	M14XP1.5	28	12	20	20	48	47	76	30	PT1/4	8	56	8	185	160	25	15	20	30	27
Ø50	M33XP2.0	20	M16XP1.5	28	17	20	20	59	58	76	30	PT1/4	8	56	8	195	170	25	15	25	35	32
Ø63	M40XP2.0	20	M16XP1.5	28	17	25	20	72	71	80	30	PT1/4	8	60	15	209	184	25	15	25	35	32

備註：
1.本系列行程超過1500mm(含)以上時,活塞(PM)長度須加倍長(尺寸P,S, ZA,ZC,ZD須再加PM尺寸長度乙次)。
2.AST 為客戶指定之可調行程。
3.本系列MR50,MR63行程500mm(含)以上,軸心牙加大為M18XP1.5。

1.The series stroke exceed (includes) 1500mm, should redouble length (PM) of piston. (Add twice length PM of size:P,S,ZA,ZC,ZD).
2.AST:Adjustable stroke by customer assigment.
3.MR50, MR63 stroke exceed (include) 500mm, axletree broaden be M18xP1.5.

圓型氣缸FA板尺寸圖
MR Series FA Dimensional Features(0.99Mpa)

MRA MRA(後平)+FA TYPE

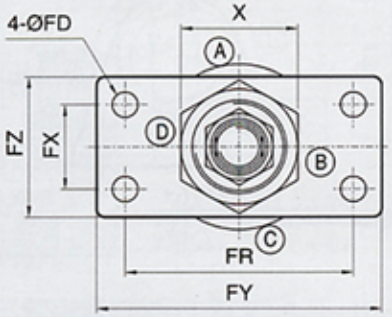

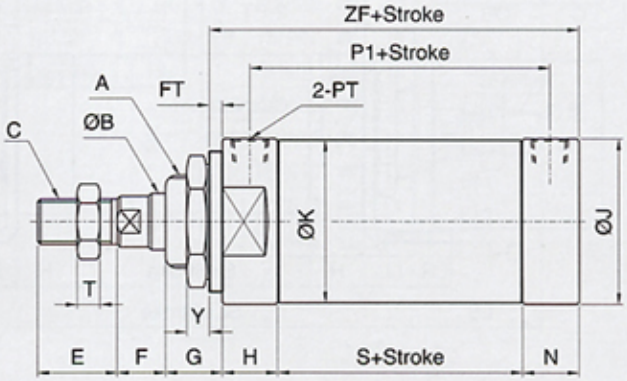

MRD MRD+FA TYPE

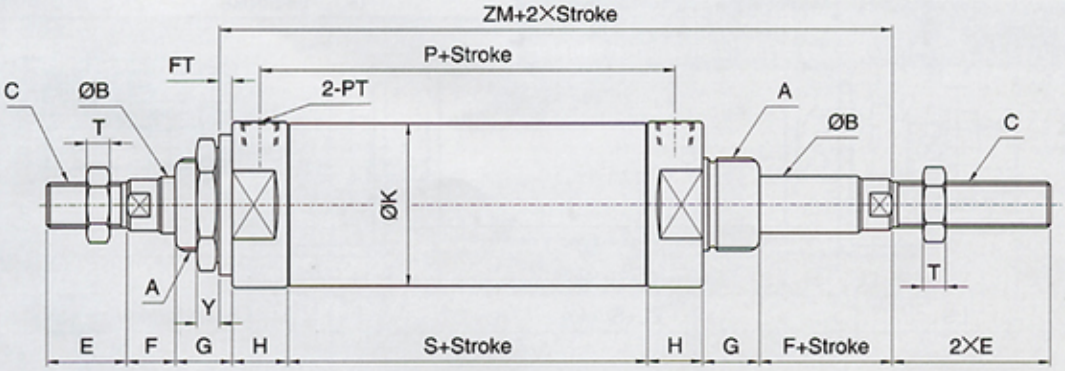

MRA-MRD TYPE																					FA TYPE					
BORE \ SIZE	A	B	C	E	F	G	H	N	ØJ	ØK	P	P1	PM	PT	T	S	X	Y	ZF	ZM	ØFD	FT	FR	FX	FY	FZ
Ø40	M33XP2.0	16	M14XP1.5	28	12	20	20	23	48	47	76	77.5	30	PT1/4	8	56	41	8	103.5	132.5	9	4.5	80	30	100	50
Ø50	M33XP2.0	20	M16XP1.5	28	17	20	20	23	59	58	76	77.5	30	PT1/4	8	56	41	8	103.5	137.5	9	4.5	80	30	100	50
Ø63	M40XP2.0	20	M16XP1.5	28	17	25	20	23	72	71	80	81.5	30	PT1/4	8	60	55	15	114	153	12	11	93	50	115	72

備註:

1.本系列行程超過1500mm(含)以上時,活塞(PM)長度須加倍長(尺寸P,S,ZF,ZM須再加PM尺寸長度乙次)。

2.本系列MR50,MR63行程500mm(含)以上,軸心牙加大為M18XP1.5。

1.The series stroke exceed (includes) 1500mm, should redouble length (PM) of piston. (Add twice length PM of size:P,S,ZF,ZM).

2.MR50, MR63 stroke exceed (include) 500mm, axletree broaden be M18xP1.5.

圓型氣缸LB架尺寸圖
MR Converter LB Dimensional Features(0.99Mpa)

MRC MRC+LB(架) TYPE

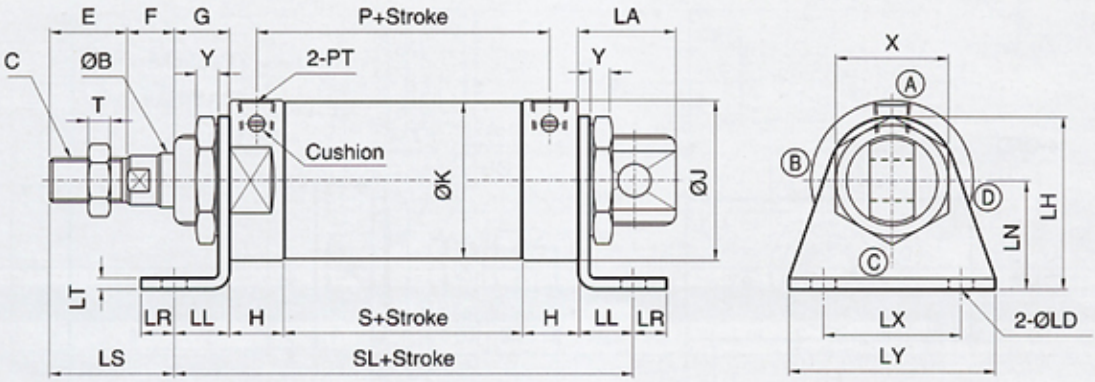

MRD MRD+LB(架) TYPE

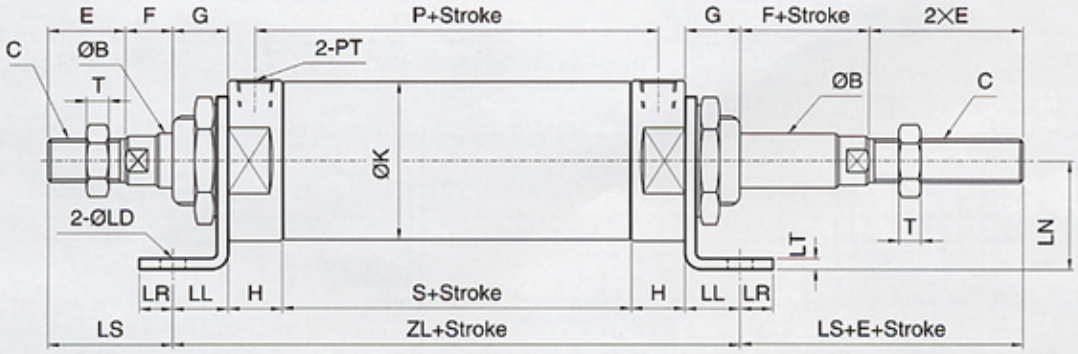

MRC-MRD TYPE																		LB TYPE							
BORE \ SIZE	B	C	E	F	G	H	ØJ	ØK	LS	P	PM	PT	T	S	X	Y	ZL	ØLD	LH	LN	LL	LR	LT	LX	LY
Ø40	16	M14XP1.5	28	12	20	20	48	47	40	76	30	PT1/4	8	56	41	8	136	9	64	40	20	10	4.5	50	75
Ø50	20	M16XP1.5	28	17	20	20	59	58	45	76	30	PT1/4	8	56	41	8	136	9	64	40	20	10	4.5	50	75
Ø63	20	M16XP1.5	28	17	25	20	72	71	25	80	30	PT1/4	8	60	55	15	190	12	75	47	45	30	9	60	88

備註：

1.本系列行程超過1500mm(含)以上時,活塞(PM)長度須加倍長(尺寸P,S,ZL須再加PM尺寸長度乙次)。

2.本系列MR50,MR63行程500mm(含)以上,軸Ⓓ牙加大為M18XP1.5。

1.The series stroke exceed (includes) 1500mm, should redouble length (PM) of piston. (Add twice length PM of size:P,S,ZL).

2.MR50, MR63 stroke exceed (include) 500mm, axletree broaden be M18xP1.5.

快速索引

QUICK INDEX

MI,MK- 圓型不鏽鋼氣缸系列 Stainless Steel Body Air Cylinders P.45

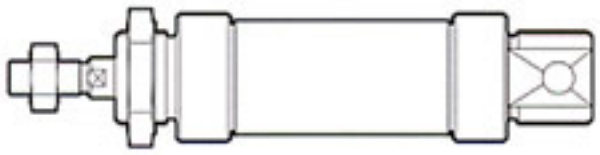

MIB MI+B (標準型) TYPE
MID MI+D (雙軸型) TYPE
MID MID+AST (雙軸型附可調帽) TYPE
..... P. 46

MKB MK+B (標準型) TYPE
MKD MK+D (雙軸型) TYPE
MKD MKD+AST (雙軸型附可調帽) TYPE
..... P. 47

MI(K)S MI(K)+S (後平) +FA TYPE
MI(K)D MI(K)D+FA TYPE
..... P. 48

MI(K)B MI(K)B+LB (架) TYPE
MI(K)D MI(K)D+LB (架) TYPE
..... P. 49

MI(K)B MI(K)+CU (座) TYPE
MI(K)2D Multiple position cylinders 雙出軸兩位置氣缸
..... P. 50

MI(K)2S Multiple position cylinders 行程二段式
MI(K)2C Tandem cylinders 串聯式倍力缸
..... P. 51

ASHUN

圓型不鏽鋼氣缸採購指南 Stainless Steel Body Air Cylinders How to order (0.99Mpa)

MIB / MKB | R | Ø32 * Ø12 * 50ST | LB + Y + PPV + Es2

型 式 TYPE	
MIB	CA型
MIS	平尾型
MID	雙軸型
MISA	單動常入型
MISB	單動常出型

缸內徑 CYLINDER BORE	軸心 ROD	最大衝程 MAX STROKE
Ø12	Ø6	300
Ø16	Ø6	300
Ø20	Ø8	600
Ø25	Ø10	1000
Ø32	Ø12	1000
Ø40	Ø16	1500

無記號	不附磁石
R	內附磁石

缸體配件 BORE ACCESSORY		
記號 SIGN	型式 TYPE	簡圖 DRAWING
FA	前法蘭型	
LB	腳座型	
CU	CU型搖擺座	

軸心配件 ROD ACCESSORY		
記號 SIGN	型式 TYPE	簡圖 DRAWING
Y	Y型接頭	
YP	Y附PIN	
I	I型接頭	
AKG	浮動接頭	
PHS	魚眼接頭	
T	T型接頭	
H	焊套接頭	
A	可調螺帽	

無記號	無緩衝
PPV	附緩衝
Ø20~Ø40可附緩衝	

磁簧開關	
記號	數量
無記號	無
Es1	1個
Es2	2個

*本系列Ø12~Ø25符合ISO6432國際標準規格
*本系列Ø32~Ø40符合JIS規格

圓型不鏽鋼氣缸特性資料 Specification

氣缸內徑(Bore sizes of cylinder)(mm)	MIØ12	MIØ16	MIØ20	MIØ25	MKØ32	MKØ40
標準庫存行程(Standard stroke)(mm)	25, 30, 50, 75, 100, 125, 150, 200					
工作媒體(Power fluid)	過濾乾淨之壓縮空氣 Filtered air					
使用壓力範圍 (The range of pressure)(kg/cm²)	0.5-9.9					
使用溫度範圍 (The range of temperature)(°c)	-10~+60					
使用速度範圍 (The range of speed)(mm/sec)	3~300					
緩衝行程(Cushion stroke)(mm)	NO	NO	20	20	19.5	17.5

圓型不鏽鋼氣缸結構圖 Inside Structure and Parts List

MKB

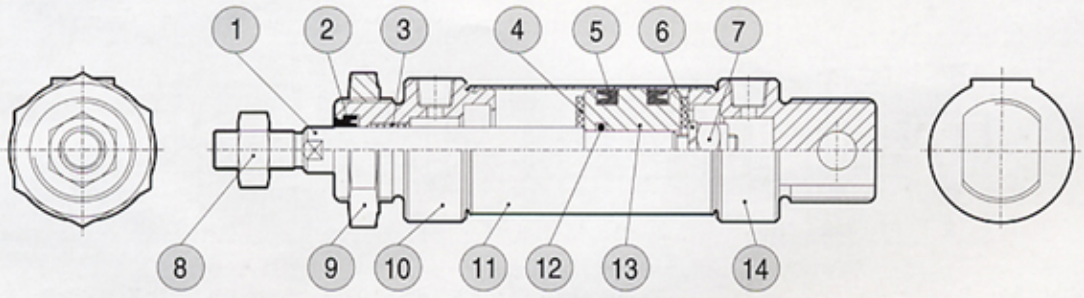

NO	零件名 Part mane		數量 Quantity	NO	零件名 Part mane		數量 Quantity	NO	零件名 Part mane		數量 Quantity
1	活塞桿	Piston rod	1	6	彈簧華司	Spring washer	1	11	氣缸本體	Cylinder tube	1
2	軸用封環	Rod packing	1	7	螺帽	Nut	1	12	O型環	Gasket	1
3	乾式軸承	Oilless bearing	1	8	軸心螺帽	Rod nut	1	13	活塞本體	Piston	1
4	緩衝墊片	Cushion lining	2	9	前蓋螺帽	Cover nut	1	14	後蓋	End cover	1
5	橡膠活塞環	Piston packing	2	10	前蓋	Rod cover	1				

Series
MIß,MID

圓型不鏽鋼氣缸標準型尺寸圖
MI Series Dimensional Features(0.99Mpa)

MIß MI+B (標準型) TYPE

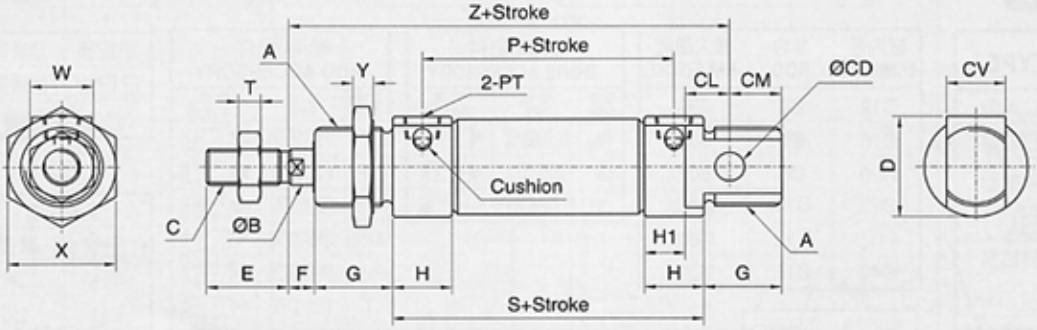

MIB TYPE																			CA TYPE			
BORE \ SIZE	A	ØB	C	D	E	F	G	H	H1	P	PM	PT	S	W	T	X	Y	Z	ØCD	CL	CM	CV
Ø12	M16XP1.5	6	M6XP1.0	20	16	5	17	9	3	40	18	M5XP0.8	49	10	5	22	4.5	74	6	9	14	12
Ø16	M16XP1.5	6	M6XP1.0	20	16	5	17	10	5	46	22	M5XP0.8	56	14	5	22	4.5	82	6	9	13	12
Ø20	M22XP1.5	8	M8XP1.25	28	20	6	18	15	9	50	23	PT1/8	65	17	5	29	5.5	95	8	12	12	16
Ø25	M22XP1.5	10	M10XP1.25	28	22	7	21	16	11	53	23	PT1/8	69	17	6	29	5.5	104	8	12	14	16

MID MI+D (標準型) TYPE

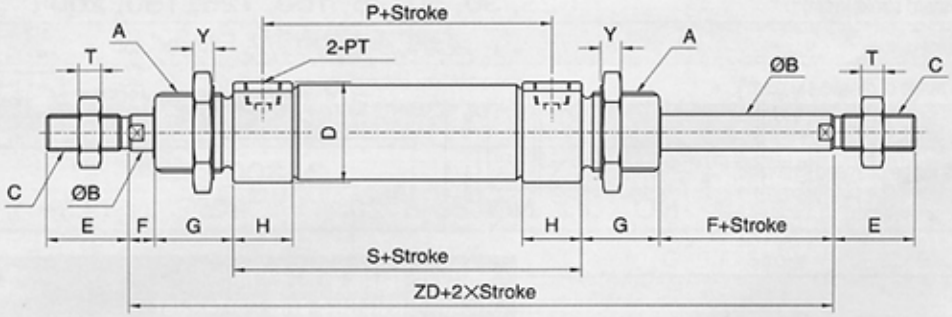

MID MID+AST (雙軸型附可調帽) TYPE

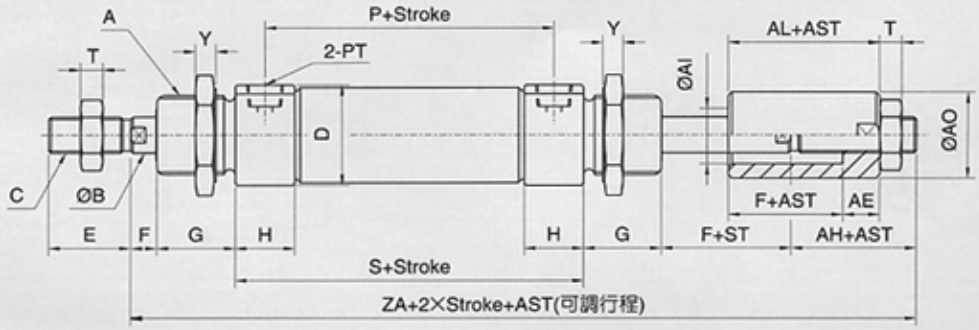

MID TYPE																		A(可調帽) TYPE			
BORE \ SIZE	A	ØB	C	D	E	F	G	H	P	PM	PT	S	T	Y	ZA	ZD	AH	AE	AI	AO	AL
Ø12	M16XP1.5	6	M6XP1.0	20	16	5	17	9	40	18	M5XP0.8	49	5	4.5	108	93	15	8	10	16	13
Ø16	M16XP1.5	6	M6XP1.0	20	16	5	17	10	46	22	M5XP0.8	56	5	4.5	115	100	15	8	10	16	13
Ø20	M22XP1.5	8	M8XP1.25	28	20	6	18	15	50	23	PT1/8	65	5	5.5	129	113	16	10	14	20	16
Ø25	M22XP1.5	10	M10XP1.25	28	22	7	21	16	53	23	PT1/8	69	6	5.5	143	125	18	10	14	20	17

備註：

1.PM 為本系列之活塞長度。
2.AST 為可戶指定之可調行程。
3.本系列尺寸符合ISO6432國際標準規格.MIØ20-MIØ25另有緩衝型可供選擇。

1.PM:Piston length
2.AST:Adjustable stroke by customer assigment.
3.The series size ISO 6432 approved is standard size, MIØ20~MIØ25 with cushion type for optional.

ASHUN

圓型不鏽鋼氣缸標準型尺寸圖
MK Series Dimensional Features(0.99Mpa)

MKB MK+B (標準型) TYPE

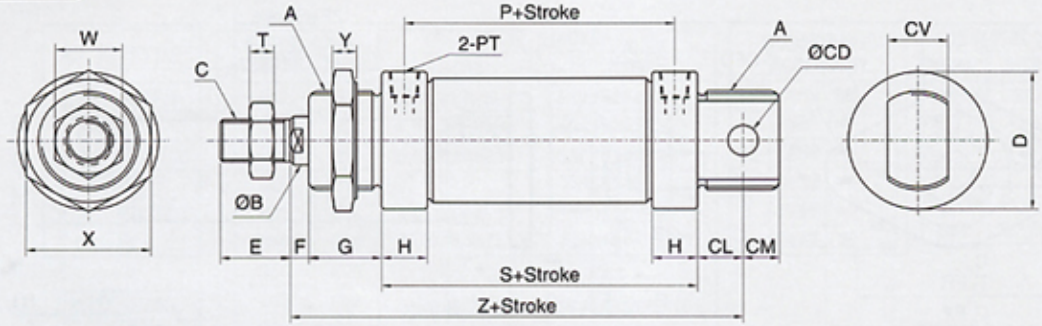

MKB TYPE																		CA TYPE			
BORE \ SIZE	A	ØB	C	D	E	F	G	H	P	PM	PT	S	W	T	X	Y	Z	ØCD	CL	CM	CV
Ø32	M27XP2.0	12	M10XP1.25	37.5	23	8	18	16	60	29	PT1/8	76	17	8	35	8	117	10	15	10	20
Ø40	M33XP2.0	16	M14XP1.5	46	23	6	24	15	62	32	PT1/8	77	22	8	41	8	122	10	15	12	20

MKD MK+D (雙軸型) TYPE

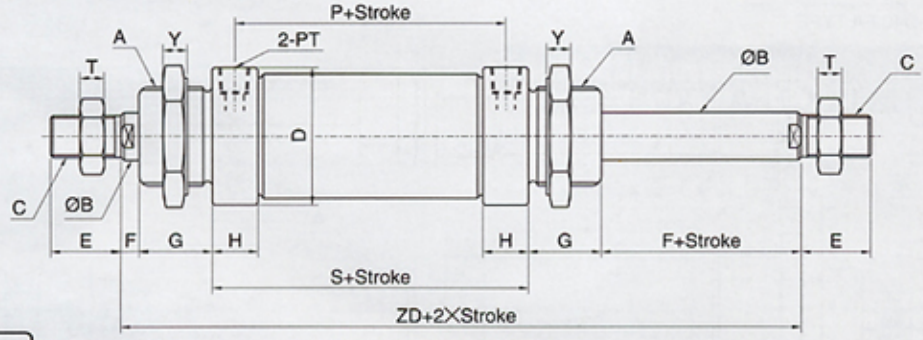

MKD MKD+AST (雙軸型附可調帽) TYPE

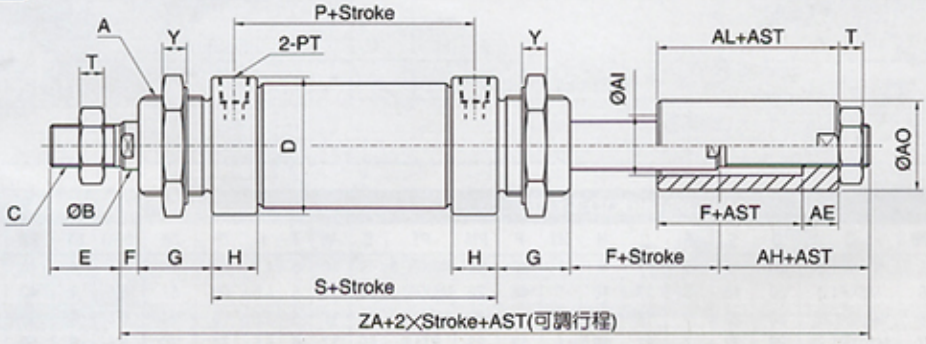

MKD TYPE																		A(可調帽) TYPE			
BORE \ SIZE	A	ØB	C	D	E	F	G	H	P	PM	PT	S	T	Y	ZA	ZD	AH	AE	AI	AO	AL
Ø32	M27XP2.0	12	M10XP1.25	37.5	23	8	18	16	60	29	PT1/8	76	8	8	148	128	20	12	16	25	20
Ø40	M33XP2.0	16	M14XP1.5	46	23	6	24	15	62	32	PT1/8	77	8	8	157	137	20	12	20	30	20

備註：

1.PM 為本系列之活塞長度。
2.AST 為可戶指定之可調行程。
3.本系列有附緩衝型可供選擇。

1.PM:Piston length
2.AST:Adjustable stroke by customer assigment.
3.The series with cushion type for optional.

Series MI(K)-FA

圓型不鏽鋼氣缸FA板尺寸圖
MI,MK Series FA Dimensional Features(0.99Mpa)

MI(K)S MI(K)+S (後平)+FA TYPE

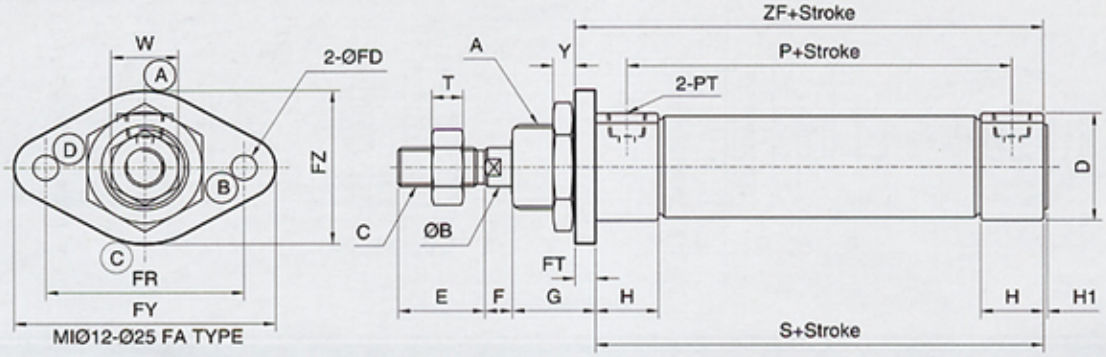

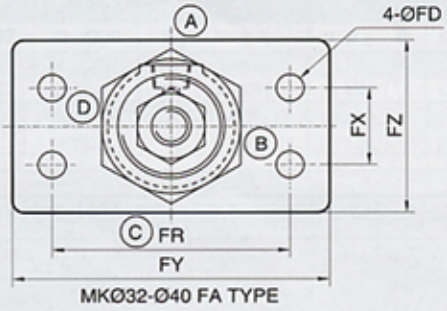

MI(K)D MI(K)D+FA TYPE

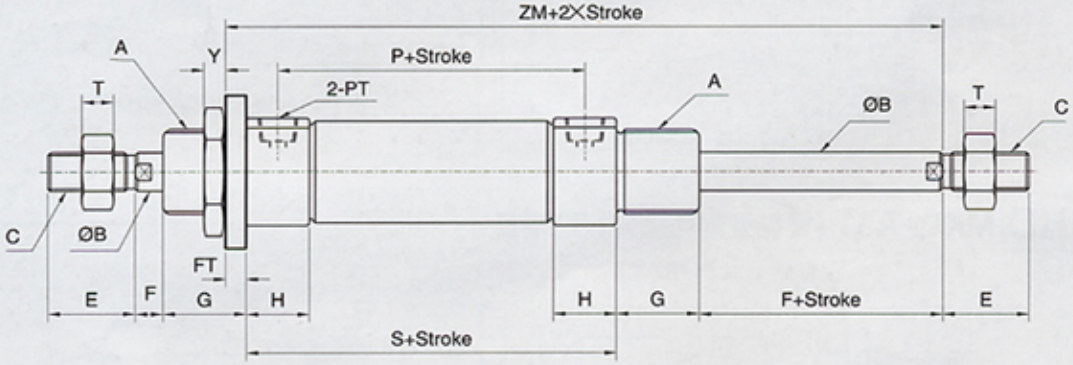

MI(K)S-MI(K)D TYPE																			FA TYPE					
BORE \ SIZE	A	ØB	C	D	E	F	G	H	H1	P	PM	PT	S	W	T	Y	ZF	ZM	ØFD	FT	FR	FX	FY	FZ
Ø12	M16XP1.5	6	M6XP1.0	20	16	5	17	9	1	40	18	M5XP0.8	49	10	5	4.5	53	75	5.5	4	40	—	53	30
Ø16	M16XP1.5	6	M6XP1.0	20	16	5	17	10	1	46	22	M5XP0.8	56	14	5	4.5	60	82	5.5	4	40	—	53	30
Ø20	M22XP1.5	8	M8XP1.25	28	20	6	18	15	1	50	23	PT1/8	65	17	5	5.5	70	94	6.5	5	50	—	66	40
Ø25	M22XP1.5	10	M10XP1.25	28	22	7	21	16	1	53	23	PT1/8	69	17	6	5.5	74	102	6.5	5	50	—	66	40
Ø32	M27XP2.0	12	M10XP1.25	37.5	23	8	18	16	1	60	29	PT1/8	76	17	8	8	80.5	106.5	7	4.5	60	20	80	45
Ø40	M33XP2.0	16	M14XP1.5	46	23	6	24	15	1	62	32	PT1/8	77	22	8	8	81.5	111.5	9	4.5	80	30	100	50

備註：

1.PM 為本系列活塞長度。
2.本系列 MIØ12-MIØ16無緩衝裝置。

1.PM:Piston length
2.The series MIØ12~MIØ16 no cushion device.

ASHUN

圓型不鏽鋼氣缸LB架尺寸圖
MI,MK Series LB Dimensional Features(0.99Mpa)

MI(K)B MI(K)B+LB (架) TYPE

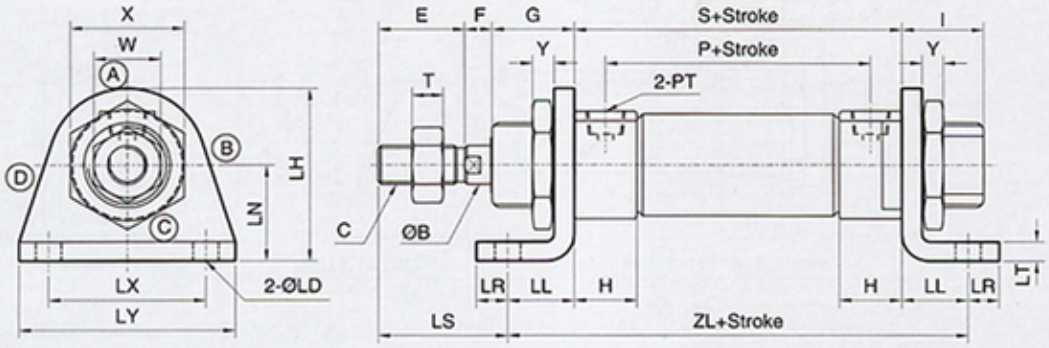

MI(K)D MI(K)D+LB (架) TYPE

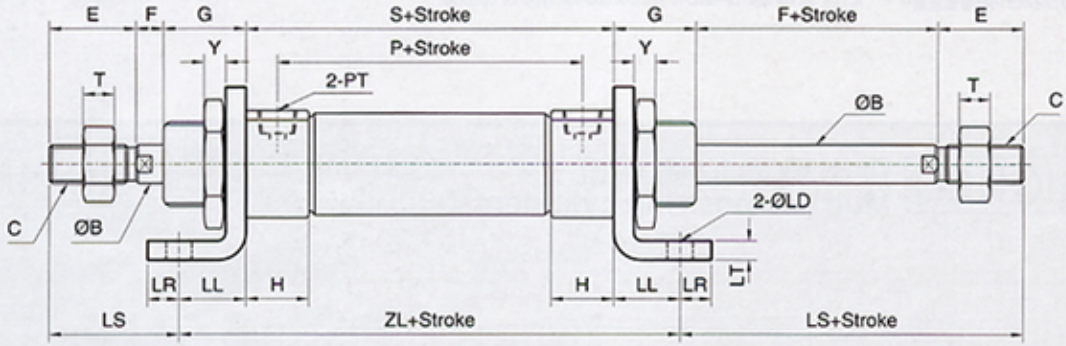

MI(K)B-MI(K)D TYPE																		LB TYPE							
BORE \ SIZE	ØB	C	E	F	G	H	I	LS	P	PM	PT	S	W	T	X	Y	ZL	ØLD	LH	LN	LL	LR	LT	LX	LY
Ø12	6	M6XP1.0	16	5	17	9	17	24	40	18	M5XP0.8	49	10	5	22	4.5	77	5.5	33	20	14	6	4	32	42
Ø16	6	M6XP1.0	16	5	17	10	17	24	46	22	M5XP0.8	56	14	5	22	4.5	84	5.5	33	20	14	6	4	32	42
Ø20	8	M8XP1.25	20	6	18	15	18	27	50	23	PT1/8	65	17	5	29	5.5	99	6.5	45	25	17	8	5	40	54
Ø25	10	M10XP1.25	22	7	21	16	21	33	53	23	PT1/8	69	17	6	29	5.5	103	6.5	45	25	17	8	5	40	54
Ø32	12	M10XP1.25	23	8	18	16	25	29	60	29	PT1/8	76	17	8	35	8	116	7	55	35	20	10	4.5	40	55
Ø40	16	M14XP1.5	23	6	24	15	27	33	62	32	PT1/8	77	22	8	41	8	117	9	63.5	40	20	10	4.5	50	75

備註：

1.PM 為本系列活塞長度。
2.本系列 MIØ12-MIØ16無緩衝裝置。

1.PM:Piston length
2.The series MIØ12~MIØ16 no cushion device.

Series MI(K)-CU,2D

圓型不鏽鋼氣缸CU座+雙動兩位置尺寸圖
MI,MK Series CU,2D Dimensional Features(0.99Mpa)

MI(K)B MI(K)+CU (座) TYPE

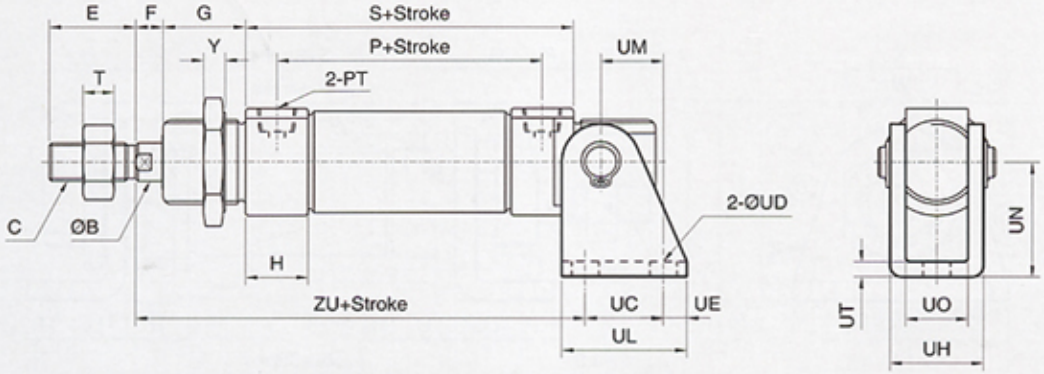

MI(K)B-MI(K)D TYPE														CU TYPE								
BORE \ SIZE	ØB	C	E	F	G	H	P	PM	PT	S	T	Y	ZU	UC	ØUD	UE	UH	UL	UM	UN	UO	UT
Ø12	6	M6XP1.0	16	5	17	9	40	18	M5XP0.8	49	5	4.5	72	15	6	5	18	25	13	27	12	3
Ø16	6	M6XP1.0	16	5	17	10	46	22	M5XP0.8	56	5	4.5	80	15	6	5	18	25	13	27	12	3
Ø20	8	M8XP1.25	20	6	18	15	50	23	PT1/8	65	5	5.5	91	20	7	6	24	32	16	30	16	4
Ø25	10	M10XP1.25	22	7	21	16	53	23	PT1/8	69	6	5.5	100	20	7	6	24	32	16	30	16	4
Ø32	12	M10XP1.25	23	8	18	16	60	29	PT1/8	76	8	8	112	25	7	7.5	28	40	20	40	20	4
Ø40	16	M14XP1.5	23	6	24	15	62	32	PT1/8	77	8	8	116	25	9	7.5	28	40	20	40	20	4

備註：

1.PM 為本系列活塞長度。
2.本系列 MIØ12-MIØ16無緩衝裝置。

1.PM:Piston length
2.The series MIØ12~MIØ16 without cushion type for optional.

MI(K)2D 雙出軸兩位置氣缸 Multiple position cylinders

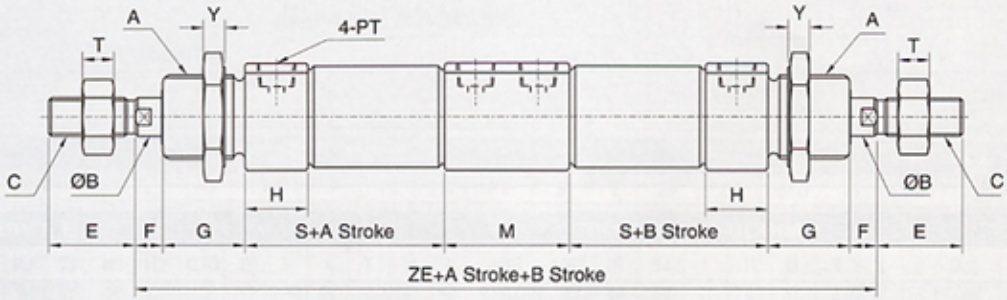

MI(K)2D TYPE														
BORE \ SIZE	A	ØB	C	E	F	G	H	M	PM	PT	S	T	Y	ZE
Ø20	M22XP1.5	8	M8XP1.25	20	6	18	15	30	23	PT1/8	50	5	5.5	178
Ø25	M22XP1.5	10	M10XP1.25	22	7	21	16	32	23	PT1/8	53	6	5.5	194
Ø32	M27XP2.0	12	M10XP1.25	23	8	18	16	32	29	PT1/8	60	8	8	204
Ø40	M33XP2.0	16	M14XP1.5	23	6	24	15	30	32	PT1/8	62	8	8	214

備註：

1.PM 為本系列活塞長度。　1.PM:Piston length

ASHUN

圓型不鏽鋼氣缸多位置尺寸圖
MI,MK Series 2C,2S Dimensional Features(0.99Mpa)

MI(K)2S 行程二段式 Multiple position cylinders

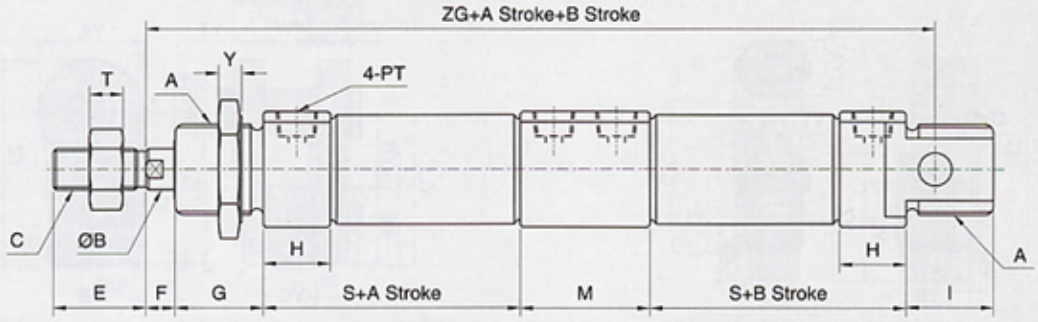

MI(K)2S TYPE

BORE \ SIZE	A	ØB	C	E	F	G	H	I	M	PM	PT	S	T	Y	ZG
Ø20	M22XP1.5	8	M8XP1.25	20	6	18	15	18	30	23	PT1/8	50	5	5.5	160
Ø25	M22XP1.5	10	M10XP1.25	22	7	21	16	21	32	23	PT1/8	53	6	5.5	173
Ø32	M27XP2.0	12	M10XP1.25	23	8	18	16	25	32	29	PT1/8	60	8	8	193
Ø40	M33XP2.0	16	M14XP1.5	23	6	24	15	27	30	32	PT1/8	62	8	8	199

MI(K)2C 串聯式倍力缸 Tandem cylinders

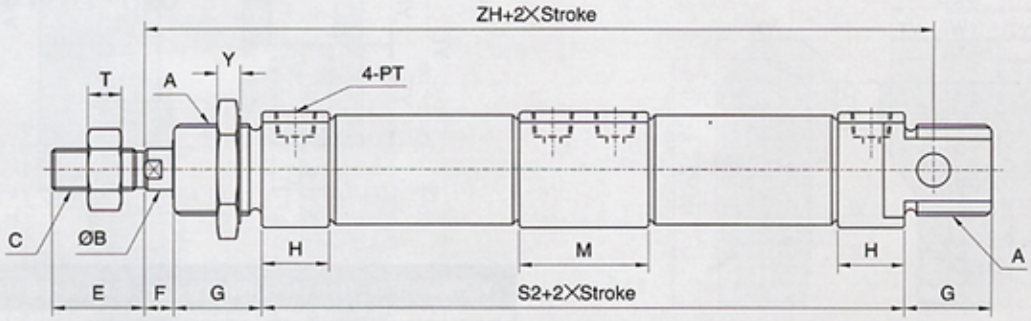

MI(K)2C TYPE

BORE \ SIZE	A	ØB	C	E	F	G	H	I	M	PM	PT	S2	T	Y	ZH
Ø20	M22XP1.5	8	M8XP1.25	20	6	18	15	18	30	23	PT1/8	130	5	5.5	160
Ø25	M22XP1.5	10	M10XP1.25	22	7	21	16	21	32	23	PT1/8	138	6	5.5	173
Ø32	M27XP2.0	12	M10XP1.25	23	8	18	16	25	32	29	PT1/8	152	8	8	193
Ø40	M33XP2.0	16	M14XP1.5	23	6	24	15	27	30	32	PT1/8	154	8	8	199

備註：

1.PM 為本系列活塞長度。 1.PM:Piston length

快速索引

QUICK INDEX

氣缸系列軸心配件
Accessories for Pneumatic Series Cylinders ..... P.52~54

Y型接頭附Pin Y ROD CLEVIS (with pin) ..... P. 52

I型接頭 I ROD END MOUNTING ..... P. 53

H焊套接頭 H ROD END MOUNTING, PHS魚眼接頭 OSCILLATING EYES
T型接頭 T ROD END MOUNTING, KG浮動接頭 COMPENSATING JOING ..... P. 54

氣壓系列軸心配件尺寸圖 Accessories for Pneumatic Series Cylinders

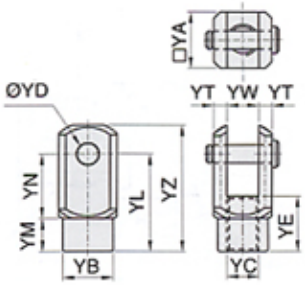

Y型接頭附PIN Rod Clevis(With pin) Material:SS41(鐵製)											
TYPE	YA	YB	YC	YD	YE	YL	YM	YN	YT	YW	YZ
IY-006	13	11	M6XP1.0	6	12	24	9	15	3.3	6.4	31
IY-008	16	14	M8XP1.25	8	15	32	12	20	3	9	42
IY-010	19	18	M10XP.125	10	20	40	15	25	4.5	10	52
IY-014	25	22	M14XP1.5	10	24	44	15	29	5.5	14	57

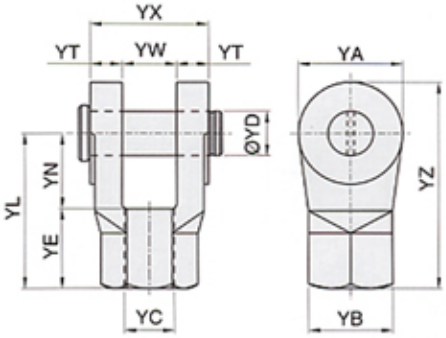

Y型接頭附PIN Rod Clevis(With pin) Material:FCD45(鑄鐵)											
TYPE	YA	YB	YC	YD	YE	YL	YN	YT	YW	YX	YZ
MY-014	29	27.5	M14XP1.5	12	35	56	21	14	16	44	70
MY-016	29	27.5	M16XP1.5	12	35	56	21	14	16	44	70
MY-018	29	27.5	M18XP1.5	12	35	56	21	14	16	44	70
MY-022	46	37	M22XP1.5	20	36	70	34	14	24	52	93
MY-026	52	42	M26XP1.5	20	35	70	35	15	28	58	96
MY-030	55	42	M30XP1.5	20	41	80	39	20	32	72	107
MY-030A	55	47	M30XP1.5	25	41	80	39	22	40	84	107

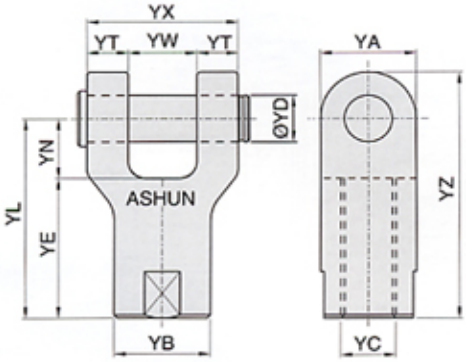

Y型接頭附PIN Rod Clevis(With pin) Material:SS41(鐵製)											
TYPE	YA	YB	YC	YD	YE	YL	YN	YT	YW	YX	YZ
TY-010	24	24	M10XP1.25	12	35	55	20	8	16	32	67
TY-012	28	28	M12XP1.25	14	42	60	18	12	20	44	74
TY-016	28	28	M16XP1.5	14	42	60	18	12	20	44	74
TY-020	38	36	M20XP1.5	20	57	85	28	16	32	64	104

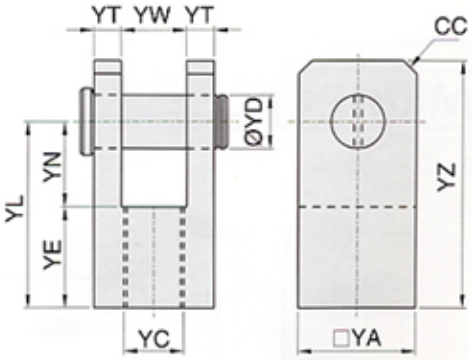

Y型接頭附PIN Rod Clevis(With pin) Material:SS41(鐵製)										
TYPE	YA	YC	YD	YE	YN	YL	YT	YW	YZ	CC
HY-014	32	M14XP1.5	12	36	32	56	8	16	70	6
HY-016	32	M16XP1.5	12	36	33	56	8	16	70	6
HY-022	44	M22XP1.5	20	38	32	70	10	24	93	10
HY-026	50	M26XP1.5	20	37	33	70	11.5	27	96	10
HY-030	60	M30XP1.5	30	40	48	88	15	30	115	10
HY-040	70	M40XP2.0	35	47	46	93	20	30	127	15
HY-050	80	M50XP2.0	40	50	50	100	22.5	35	140	15
HY-060	80	M60XP2.0	40	50	50	100	22.5	35	140	15

氣壓系列軸心配件尺寸圖 Accessories for Pneumatic Series Cylinders

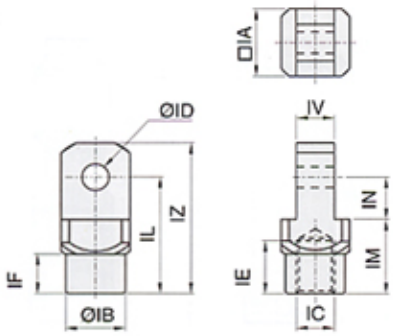

I 型接頭			I Rod end mounting					Material:SS41			
TYPE	IA	IB	IC	ID	IE	IF	IL	IM	IN	IV	IZ
II-008	16	14	M8XP1.25	8	15	12	32	21	11	9	42
II-010	19	18	M10XP.125	10	20	15	40	25	15	10	52

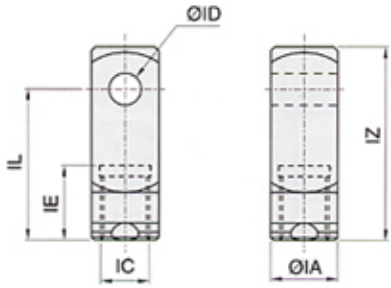

I 型接頭		I Rod end mounting			Material:SS41	
TYPE	IA	IC	ID	IE	IL	IZ
SI-014	25.4	M14XP1.5	12	40	57	73
SI-016	25.4	M16XP1.5	12	40	57	73
SI-018	25.4	M18XP1.5	12	40	57	73
SI-022	31.75	M22XP1.5	16	40	59	76

TI-010

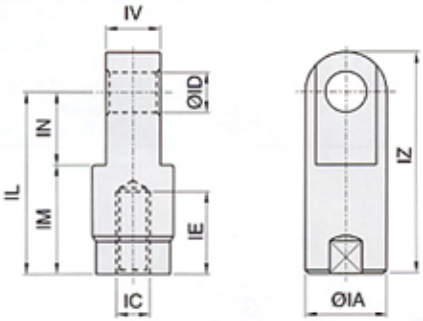

TI-012~TI-020

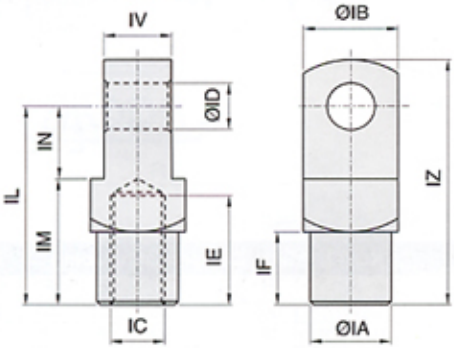

I 型接頭			I Rod end mounting						Material:SS41		
TYPE	IA	IB	IC	ID	IE	IF	IL	IM	IN	IV	IZ
TI-010	24	—	M10xP1.25	12	23	—	55	33	22	16	67
TI-012	20	24	M12xP1.25	14	25	20	60	38	22	20	72
TI-016	24	28	M16xP1.5	14	35	22	60	38	22	20	74
TI-020	30	36	M20xP1.5	20	41	30	85	53	32	32	104

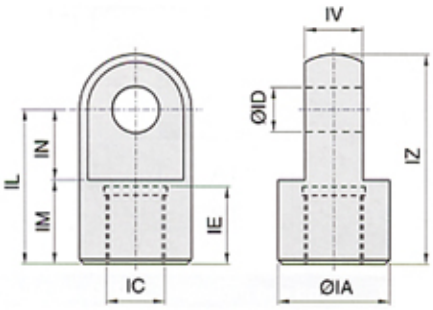

I 型接頭			I Rod end mounting					Material:SS41	
TYPE	IA	IC	ØID	IE	IL	IM	IN	IV	IZ
HI-026	50	M26XP1.5	25	40	85	45	40	30	110
HI-030	55	M30XP1.5	25	40	83	45	38	35	110
HI-040	75	M40XP2.0	35	50	90	40	50	45	130
HI-045	70	M45XP2.0	40	40	90	40	50	40	130
HI-050	90	M50XP2.0	50	60	105	50	55	55	150
HI-060	90	M60XP2.0	50	60	105	50	55	55	150

Series

H, T, PHS, KG

氣壓系列軸心配件尺寸圖 Accessories for Pneumatic Series Cylinders

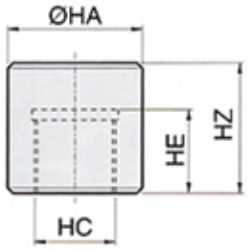

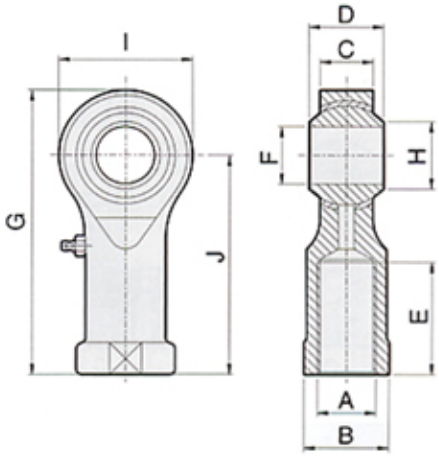

H焊套接頭 H Rod end mounting Material:SS41				
TYPE	ØHA	HC	HE	HZ
MH-006	15	M6XP1.0	15	20
MH-008	15	M8XP1.25	15	20
MH-010	20	M10XP1.25	20	30
MH-012	20	M12XP1.25	20	30
MH-014	25	M14XP1.5	20	30
MH-016	25	M16XP1.5	25	40
MH-018	30	M18XP1.5	25	40
MH-020	30	M20XP1.5	25	40
MH-022	35	M22XP1.5	32	50
MH-026	40	M26XP1.5	32	50
MH-030	45	M30XP1.5	40	55
MH-040	60	M40XP2.0	50	65
MH-050	80	M50XP2.0	50	75
MH-060	90	M60XP2.0	60	80

PHS魚眼接頭 Oscillating Eye										
TYPE	A	B	C	D	E	F	G	H	I	J
PHS-006	M6XP1.0	11	6.75	9	14	6	39	9	18	30
PHS-008	M8XP1.25	14	9	12	17	8	47	10.4	22	36
PHS-010	M10XP1.25	17	10.5	14	21	10	56	12.9	26	43
PHS-012	M12XP1.25/P1.75	19	12	16	24	12	65	15.4	30	50
PHS-014	M14XP1.5	22	13.5	19	27	14	74	16.9	34	57
PHS-016	M16XP1.5	22	15	21	33	16	83	19.4	38	64
PHS-018	M18XP1.5	27	16.5	23	36	18	92	21.4	42	71
PHS-020	M20XP1.5	30	18	25	40	20	100	24.4	46	77
PHS-022	M22XP1.5	32	20	28	43	22	109	25.8	50	84
PHS-025	M24XP2.0	36	22	31	48	25	124	29.6	60	94
PHS-030	M30XP2.0	41	25	37	56	30	145	34.8	70	110

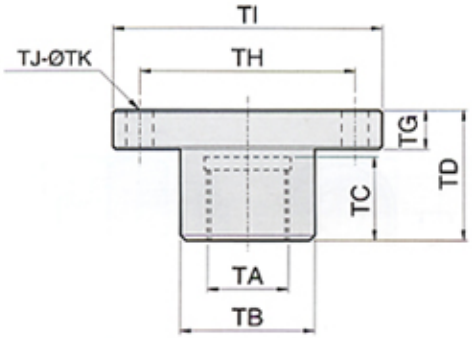

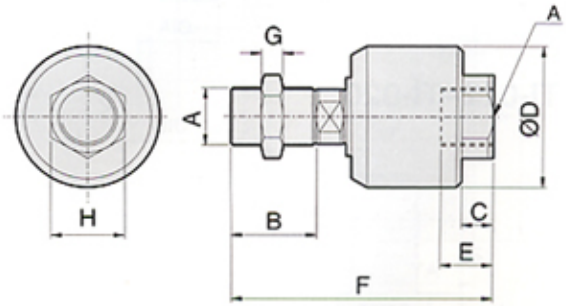

T型接頭 T Rod end mounting Material:SS41									
TYPE	TA	TB	TC	TD	TG	TH	TI	TJ	TK
MT-006	M6XP1.0	15	15	25	8	28	40	4	6
MT-008	M8XP1.25	15	15	25	8	28	40	4	6
MT-010	M10XP1.25	20	20	30	8	35	50	4	7
MT-012	M12XP1.25	20	20	30	8	35	50	4	7
MT-014	M14XP1.5	25	20	40	10	45	65	4	7
MT-016	M16XP1.5	25	25	40	10	45	65	4	7
MT-018	M18XP1.5	30	25	40	10	50	70	4	7
MT-020	M20XP1.5	35	25	40	10	55	75	4	10
MT-022	M22XP1.5	35	32	50	15	55	75	4	10
MT-026	M26XP1.5	35	32	50	15	60	85	4	10
MT-030	M30XP1.5	40	40	55	20	70	100	4	12
MT-040	M40XP2.0	55	50	65	25	85	115	6	12
MT-050	M50XP2.0	75	50	75	25	110	145	6	14
MT-060	M60XP2.0	85	60	80	30	120	155	6	14

KG浮動接頭 Compensating Joing								
TYPE	A	B	C	D	E	F	G	H
KG-1006T	M6XP1.0	12.5	5	18	7	37	4	10
KG-1008T	M8XP1.25	18	7	24	8	50	5	13
KG-1010T	M10XP1.25	20	8	26	9	58	5	17
KG-1012T	M12XP1.25/P1.75	20	9	28	9	70	6	17
KG-1014T	M14XP1.5	20	9	35	13	70	8	22
KG-1016T	M16XP1.5	25	13	45	15	90	8	27
KG-1018T	M18XP1.5	25	13	45	15	90	8	27
KG-1020T	M20XP1.5	29	15	53	18	102	9	32
KG-1022T	M22XP1.5	29	15	53	18	102	9	32
KG-1026T	M26XP1.5	35	19	61	24	124	10	41
KG-1030T	M30XP1.5	53	24	63	25	156	10	41
KG-1036T	M36XP2.0	64	24	75	46	199	10	48

MO- 方型鑄件油壓缸系列(7Mpa) Hydraulic Cylinders Series

P. 55

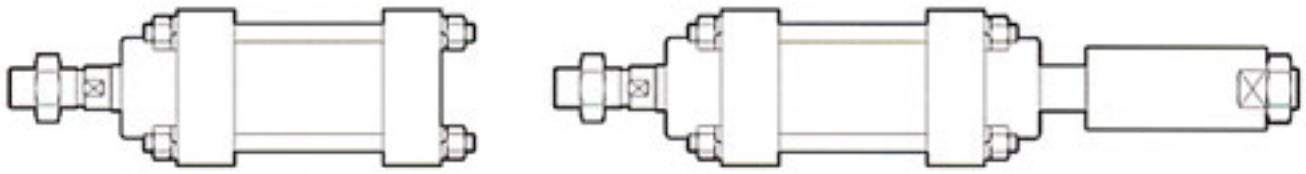

MOB MO+B(標準型)TYPE　MOD MO+D (雙軸型) TYPE
MOD MOD+AST (雙軸型附可調帽) TYPE ..... P. 56

MOB MOB+FA TYPE　MOD MOD+FA TYPE ..... P. 57

MOB MOB+FB TYPE　MOD MOD+FB TYPE ..... P. 58

MOB MOB+LB (架) TYPE　MOD MOD+LB TYPE ..... P. 59

MOB MOB+TC TYPE　MOD MOD+TC TYPE ..... P. 60

MOB MOB+CA TYPE　MOB MOB+CB TYPE ..... P. 61

ASHUN

方型鑄件油壓缸採購指南 7Mpa Hydraulic Cylinders How to order

MOBR 63 * Ø25 * 100ST LB + Y + Es2

型 式 TYPE

MOB	標準型
MOBR	標準附磁型
MOD	雙軸型
MODR	雙軸附磁型

缸內徑 CYLINDER BORE	軸心 ROD 標準-最大
Ø30	Ø16
Ø40	Ø20-Ø25
Ø50	Ø20-Ø30
Ø50A	Ø25-Ø35
Ø63	Ø25-Ø35
Ø80	Ø30-Ø40
Ø100	Ø35-Ø55
Ø125	Ø50-Ø60

行 程 STROKE

鋼管	Ø30-Ø125
最大衝程4米	
白鐵管	Ø40-Ø100
最大衝程2.8米	
鋁管	Ø30-Ø100
最大衝程2.8米	
鋁管	Ø125
最大衝程1.9米	
耐壓	20kg/cm²

缸體固定型式 ACCESSORY

FA	前法蘭型
FB	後法蘭型
LB	腳座型
TC	耳軸型
CA	單山型
CB	雙山型
CBP	CB附PIN
CAB	CA+P+CB

軸心固定型式 ACCESSORY

YP	Y附PIN
I	I型接頭
KG	浮動接頭
PHS	魚眼接頭
T	T型接頭
H	焊接接頭
A	可調螺帽

磁簧開關

記號	數量
無記號	無
Es1	1個
Es2	2個

方型鑄件油壓缸特性資料 Specification

油壓缸內徑 Bore sizes of cylinder(mm)	Ø30	Ø40	Ø50	Ø50A	Ø63	Ø80	Ø100	Ø125
工作媒介 Power fluid	以濾清之標準液壓油 Filtered oil							
缸管材質 Material of cylinder bareel	碳鋼管 Carbon steel STKM-13C/白鐵管 Stainless tubes SUS 304/AL Tubre A6063TDS-T5							
使用壓力範圍 The range of pressure(MPa)	0.3-7.0MPa(3-70kg/cm²)							
使用溫度範圍 The range of temperature(°c)	-10°~+60°(°C)							
使用速度範圍 The range of speed(mm/sec)	8~300(mm/sec)							
訂製行程於1501~2500mm間活塞(PM)長度	60	60	60	60	60	70	100	100
訂製行程於2501~4000mm間活塞(PM)長度	120	120	120	120	120	140	150	150

方型鑄件油壓缸結構圖 Inside Structure and Parts List

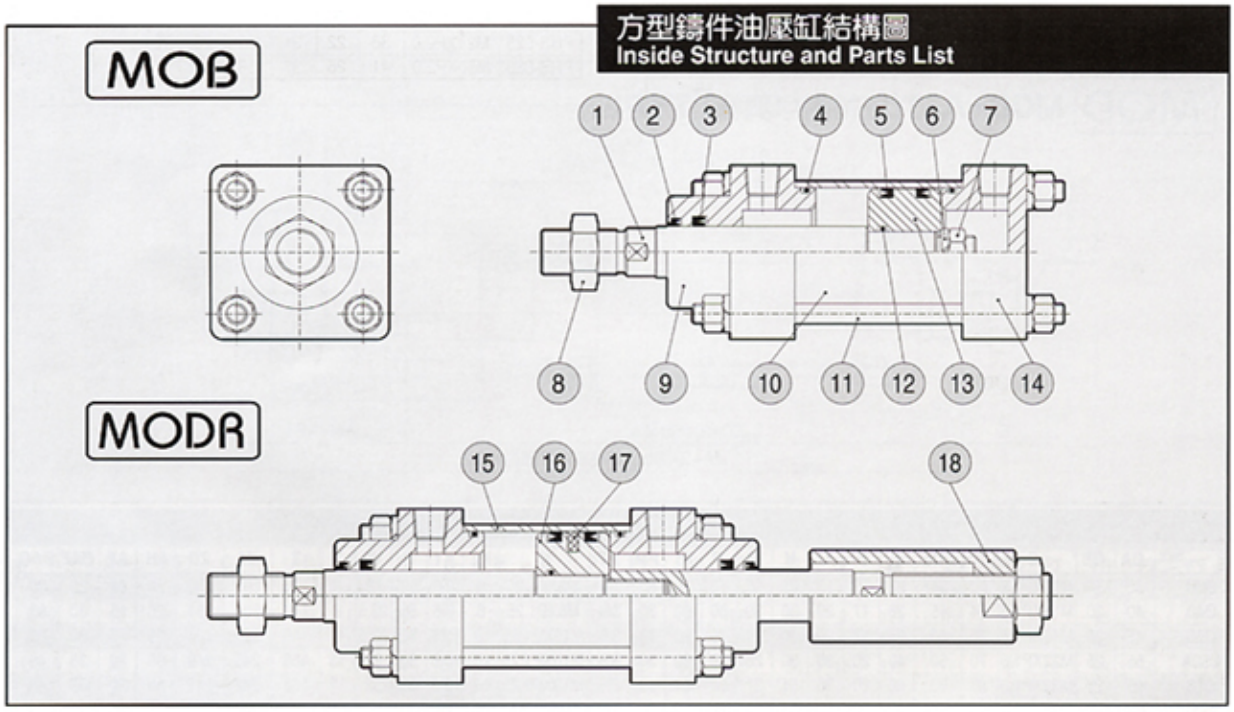

NO	零件名	Part mane	數量 Quantity	NO	零件名	Part mane	數量 Quantity	NO	零件名	Part mane	數量 Quantity
1	活塞桿	Piston rod	1	7	螺帽	Nut	1	13	活塞本體	Piston	1
2	刮油環	Dust wiper	1	8	軸心螺帽	Rod nut	1	14	後蓋	End cover	1
3	軸用油封	Rod packiog	1	9	前蓋	Rod cover	1	15	油缸本體	Cylinder tube	1
4	O型環	Gasket	2	10	油缸本體	Cylinder tube	1	16	活塞本體	Piston	1
5	橡膠活塞環	Piston packing	2	11	固定柱子	Tie bolt	4	17	磁石	Magnet	1
6	彈黃華司	Spring washer	1	12	O型環	Gasket	1	18	可調螺帽	Adjustble nut	1

Series
MOB, MOD

方型鑄件油壓缸尺寸圖
7Mpa Hydraulic Cylinders Dimensional Features

MOB MO+B(標準型) TYPE

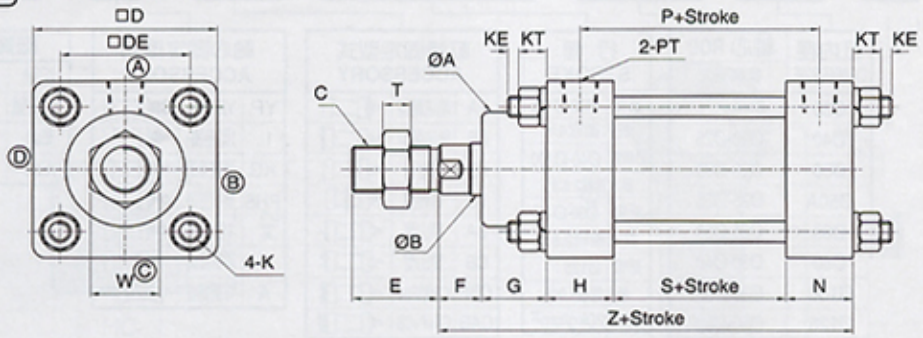

MOD MO+D(雙軸型) TYPE

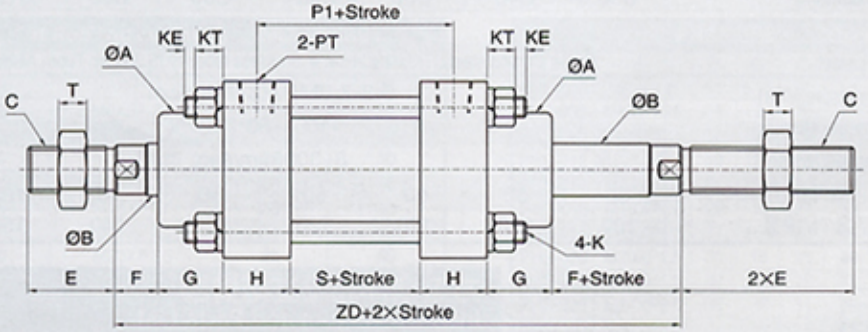

MOD MOD+AST(雙軸附可調帽) TYPE

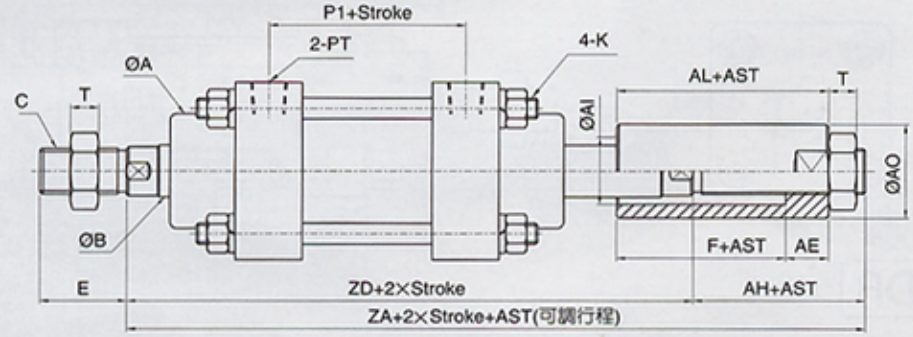

MOB-MOD TYPE																									A(可調帽) TYPE			
BORE \ SIZE	ØA	ØB	C	□D	□DE	E	F	G	H	N	P	P1	PM	PT	K	KE	KT	S	W	T	Z	ZA	ZD	AH	AE	ØAI	ØAO	AL
Ø30	30	16	M14XP1.5	50	34	28	13	15	25	25	75	75	30	1/4	M8XP1.25	8	8.5	50	22	8	128	181	156	25	15	20	30	30
Ø40	40	20	M16XP1.5	64	45	28	17	20	30	30	80	80	30	3/8	M8XP1.25	8	8.5	50	23.5	8	147	209	184	25	15	30	35	35
Ø50	45	20	M16XP1.5	70	50	28	17	20	30	28	79	80	30	3/8	M10XP1.25	10	10.5	50	23.5	8	145	209	184	25	15	30	35	35
Ø50A	55	25	M22XP1.5	70	50	40	20	30	30	28	79	80	30	3/8	M10XP1.25	10	10.5	50	32	13	158	245	210	35	20	35	45	40
Ø63	55	25	M22XP1.5	85	60	40	20	30	31	31	81	81	30	3/8	M10XP1.25	10	10.5	50	32	13	162	247	212	35	20	35	45	40
Ø80	62	30	M26XP1.5	106	74	40	20	32	37	35	91	92	35	1/2	M12XP1.5	10	13	55	35	13	179	268	233	35	20	40	50	40
Ø100	78	35	M30XP1.5	122	89	45	20	32	37	37	117	117	50	1/2	M14XP1.5	10	14.5	80	41	13	206	293	258	40	25	45	60	45
Ø125	85	50	M40XP2.0	147	110	55	25	31	40	40	120	120	50	1/2	M16XP1.5	10	17	80	55	15	216	317	272	50	30	60	80	55

備註：
1.軸心加大如未註明長度尺寸時,依照本公司規定自行加工。
2.M0 行程未超過 1500mm時,活塞(PM)長度如附表,訂製行程如超過1500mm時,活塞長度參閱特性資料表。
3.M0 行程超過 2000mm(含)時,須加拉桿中間固定座。
4.M040~M050之行程超過500mm(含)以上時,軸心牙改為M18XP1.5。
5.AST為客戶指定之可調行程。

1.The length and size of axis were not specifide to constructed must be according to our company design's modify without prior notice.
2.The MO series stroke exceed within (include)1500mm as see the property information of the length (PM) to order exceed stroke 1500mm.
3.When this series of stroke exceeds(includes) 2000mm,the fixed base of the pull rod must be added in the middle.
4.MO40~MO50 stroke exceed (include) 500mm, axletree broaden be M18xP1.5.
4.AST:Adjustable stroke by customer assigment.

方型鑄件油壓缸FA板尺寸圖
7Mpa Hydraulic Cylinders FA Dimensional Features

MOB MOB+FA TYPE

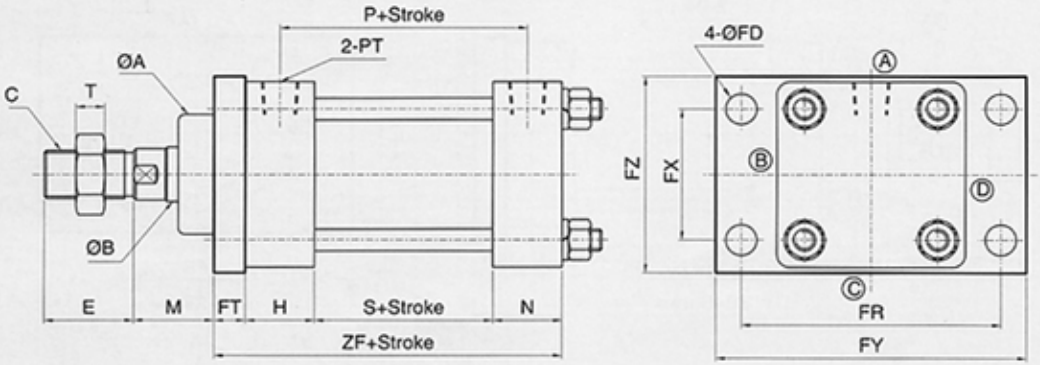

MOD MOD+FA TYPE

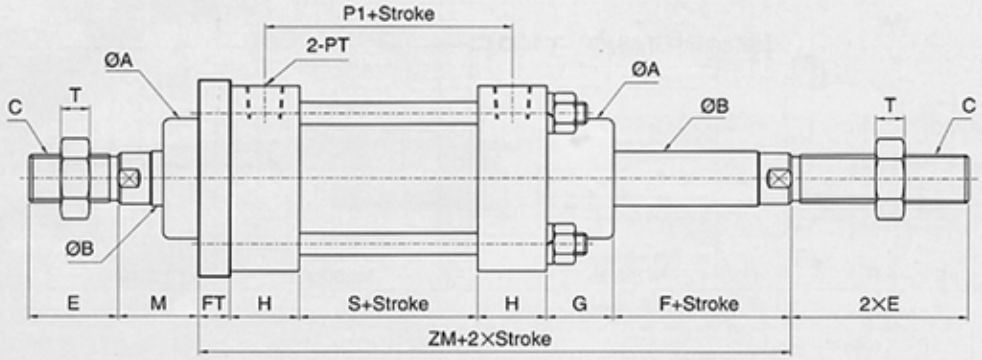

MOB-MOD TYPE																		FA-TYPE					
BORE \ SIZE	ØA	ØB	C	E	F	G	H	M	N	P	P1	PM	PT	S	T	ZF	ZM	ØFD	FT	FR	FX	FY	FZ
Ø30	30	16	M14XP1.5	28	13	15	25	17	25	75	75	30	1/4	50	8	111	139	9	11	80	34	105	52
Ø40	40	20	M16XP1.5	28	17	20	30	26	30	80	80	30	3/8	50	8	121	158	12	11	93	50	115	72
Ø50	45	20	M16XP1.5	28	17	20	30	26	28	79	80	30	3/8	50	8	119	158	12	11	93	50	115	72
Ø50A	55	25	M22XP1.5	40	20	30	30	39	28	79	80	30	3/8	50	13	119	171	12	11	93	50	115	72
Ø63	55	25	M22XP1.5	40	20	30	31	36	31	81	81	30	3/8	50	13	126	176	14	14	117	60	140	90
Ø80	62	30	M26XP1.5	40	20	32	37	32	35	91	92	35	1/2	55	13	147	201	14	20	152	75	180	105
Ø100	78	35	M30XP1.5	45	20	32	37	32	37	117	117	50	1/2	80	13	174	226	16	20	158	90	200	125
Ø125	85	50	M40XP2.0	55	25	31	40	36	40	120	120	50	1/2	80	15	180	236	18	20	184	110	225	153

備註：

1.軸心加大如未註明長度尺寸時,依照本公司規定自行加工。
2.M0 行程未超過 1500mm時,活塞(PM)長度如附表,訂製行程如超過1500mm時,活塞長度參閱特性資料表。
3.M040~M050之行程超過500mm(含)以上時,軸心牙改為M18XP1.5。

1.The length and size of axis were not specifide to constructed must be according to our company design's modify without prior notice.
2.The MO series stroke exceed within (include)1500mm as see the property information of the length (PM) to order exceed stroke 1500mm.
3.MO40~MO50 stroke exceed (include) 500mm, axletree broaden be M18xP1.5.

方型鑄件油壓缸FB板尺寸圖
7Mpa Hydraulic Cylinders FB Dimensional Features

MOB MOB+FB TYPE

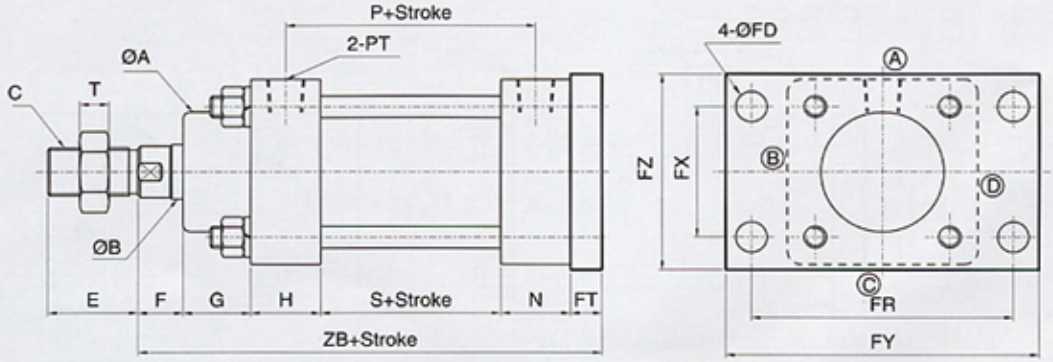

MOD MOD+FB TYPE

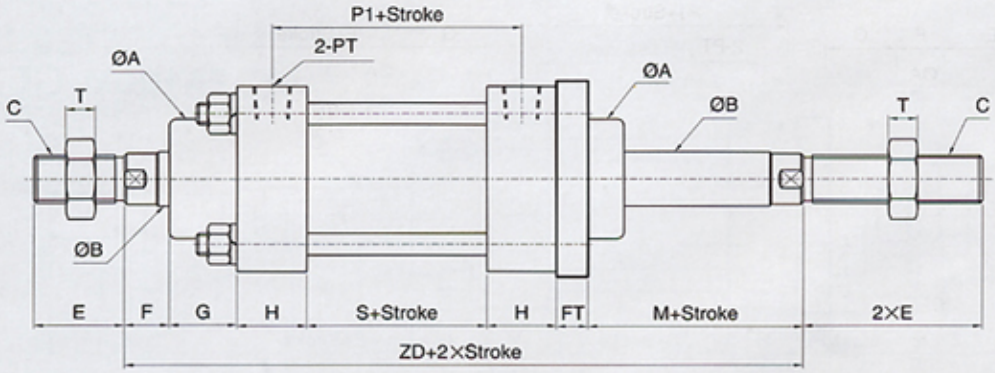

MOB-MOD TYPE																		FB TYPE					
BORE \ SIZE	ØA	ØB	C	E	F	G	H	M	N	P	P1	PM	PT	S	T	ZB	ZD	ØFD	FT	FR	FX	FY	FZ
Ø30	30	16	M14XP1.5	28	13	15	25	17	25	75	75	30	1/4	50	8	139	156	9	11	80	34	105	52
Ø40	40	20	M16XP1.5	28	17	20	30	26	30	80	80	30	3/8	50	8	158	184	12	11	93	50	115	72
Ø50	45	20	M16XP1.5	28	17	20	30	26	28	79	80	30	3/8	50	8	156	184	12	11	93	50	115	72
Ø50A	55	25	M22XP1.5	40	20	30	30	39	28	79	80	30	3/8	50	13	169	210	12	11	93	50	115	72
Ø63	55	25	M22XP1.5	40	20	30	31	36	31	81	81	30	3/8	50	13	176	212	14	14	117	60	140	90
Ø80	62	30	M26XP1.5	40	20	32	37	32	35	91	92	35	1/2	55	13	199	233	14	20	152	75	180	105
Ø100	78	35	M30XP1.5	45	20	32	37	32	37	117	117	50	1/2	80	13	226	258	16	20	158	90	200	125
Ø125	85	50	M40XP2.0	55	25	31	40	36	40	120	120	50	1/2	80	15	236	272	18	20	184	110	225	153

備註：

1.軸心加大如未註明長度尺寸時,依照本公司規定自行加工。
2.MO 行程未超過 1500mm時,活塞(PM)長度如附表,訂製行程如超過1500mm時,活塞長度參閱特性資料表。
3.MO40~MO50之行程超過500mm(含)以上時,軸心牙改為M18XP1.5。

1.The length and size of axis were not specifide to constructed must be according to our company design's modify without prior notice.
2.The MO series stroke exceed within (include)1500mm as see the property information of the length (PM) to order exceed stroke 1500mm.
3.MO40~MO50 stroke exceed (include) 500mm, axletree broaden be M18xP1.5.

ASHUN

方型鑄件油壓缸LB架尺寸圖
7Mpa Hydraulic Cylinders LB Dimensional Features

MOB MOB+LB(架) TYPE

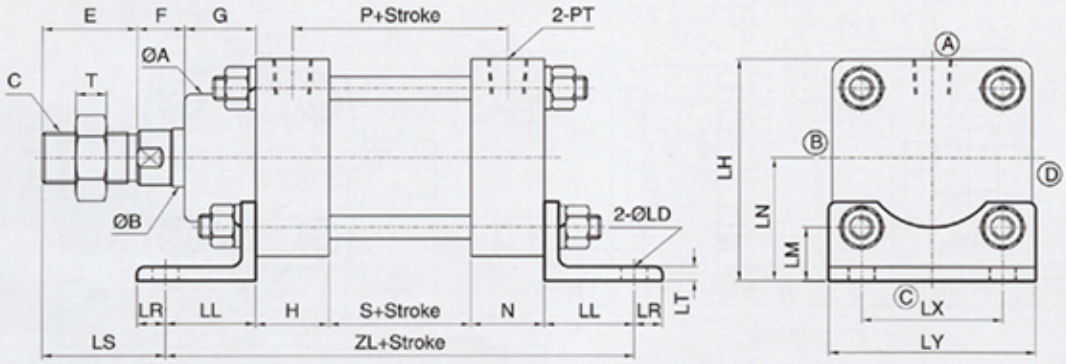

MOD MOD+LB TYPE

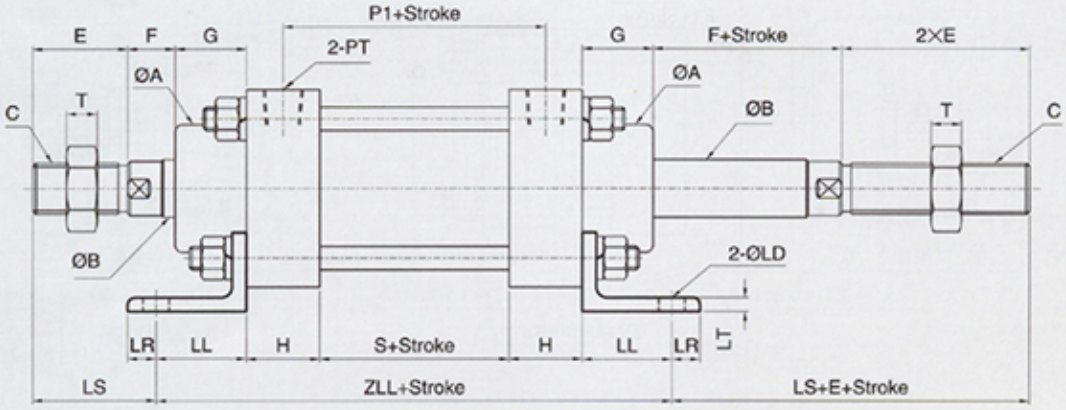

MOB-MOD TYPE																		LB TYPE								
BORE \ SIZE	ØA	ØB	C	E	F	G	H	N	LS	P	P1	PM	PT	S	T	ZL	ZLL	ØLD	LH	LN	LM	LL	LR	LT	LX	LY
Ø30	30	16	M14XP1.5	28	13	15	25	25	28	75	75	30	1/4	50	8	156	156	9	60	35	18	28	10	5	34	53
Ø40	40	20	M16XP1.5	28	17	20	30	30	27	80	80	30	3/8	50	8	186	186	9	77	45	22.5	38	12	6	45	68
Ø50	45	20	M16XP1.5	28	17	20	30	28	27	79	80	30	3/8	50	8	184	186	11	81	46	21	38	12	6	50	73
Ø50A	55	25	M22XP1.5	40	20	30	30	28	52	79	80	30	3/8	50	13	184	186	11	81	46	21	38	12	6	50	73
Ø63	55	25	M22XP1.5	40	20	30	31	31	52	81	81	30	3/8	50	13	188	188	11	96	53	23	38	12	6	60	88
Ø80	62	30	M26XP1.5	40	20	32	37	35	56	91	92	35	1/2	55	13	199	201	13	113	60	23	36	14	6	74	105
Ø100	78	35	M30XP1.5	45	20	32	37	37	49	117	117	50	1/2	80	13	250	250	16	139	78	33.5	48	27	9	89	127
Ø125	85	50	M40XP2.0	55	25	31	40	40	60	120	120	50	1/2	80	15	262	262	18	161	87	32	51	24	9	110	150

備註：

1.軸心加大如未註明長度尺寸時,依照本公司規定自行加工。
2.MO 行程未超過 1500mm時,活塞(PM)長度如附表,訂製行程如超過1500mm時,活塞長度參閱特性資料表。
3.MO 行程超過 2000mm(含)時,須加拉桿中間固定座。
4.MO40~MO50之行程超過500mm(含)以上時,軸心牙改為M18XP1.5。

1.The length and size of axis were not specifide to constructed must be according to our company design's modify without prior notice.
2.The MO series stroke exceed within (include)1500mm as see the property information of the length (PM) to order exceed stroke 1500mm.
3.When this series of stroke exceeds(includes) 2000mm,the fixed base of the pull rod must be added in the middle.
4.MO40~MO50 stroke exceed (include) 500mm, axletree broaden be M18xP1.5.

方型鑄件油壓缸TC尺寸圖
7Mpa Hydraulic Cylinders TC Dimensional Features

MOB MOB+TC TYPE

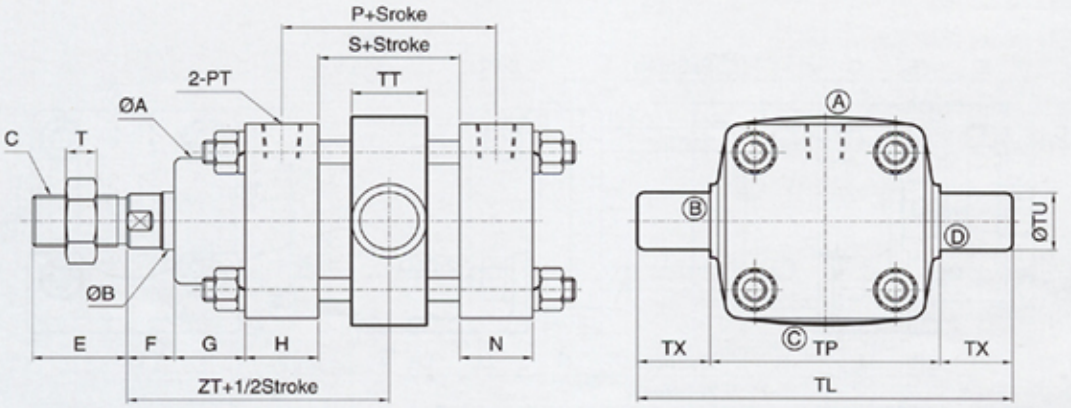

MOD MOD+TC TYPE

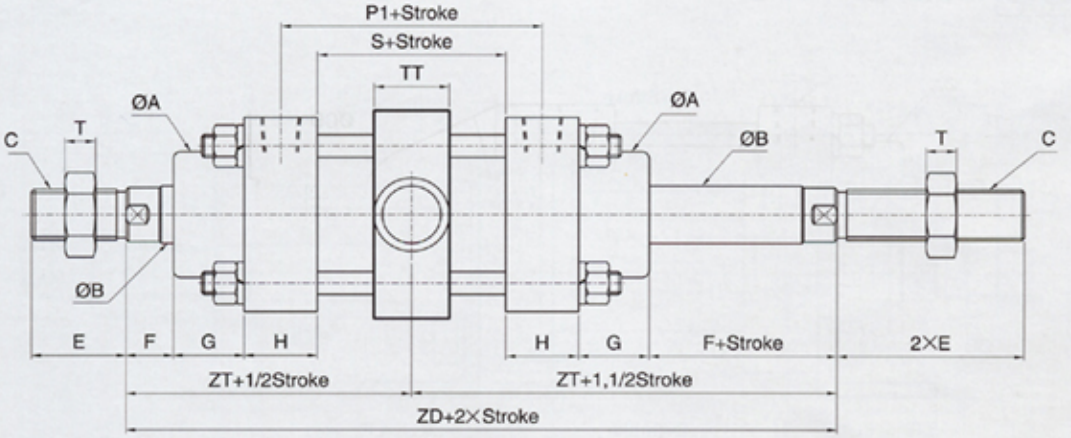

MOB-MOD TYPE																	TC TYPE				
BORE \ SIZE	ØA	ØB	C	E	F	G	H	N	P	P1	PM	PT	S	T	ZD	ZT	TL	TP	TT	ØTU	TX
Ø30	30	16	M14XP1.5	28	13	15	25	25	75	75	30	1/4	50	8	156	78	87	55	25	16	16
Ø40	40	20	M16XP1.5	28	17	20	30	30	80	80	30	3/8	50	8	184	92	127	69	25	18	29
Ø50	45	20	M16XP1.5	28	17	20	30	28	79	80	30	3/8	50	8	184	92	153	83	28	20	35
Ø50A	55	25	M22XP1.5	40	20	30	30	28	79	80	30	3/8	50	13	210	105	153	83	28	20	35
Ø63	55	25	M22XP1.5	40	20	30	31	31	81	81	30	3/8	50	13	212	106	170	98	32	25	36
Ø80	62	30	M26XP1.5	40	20	32	37	35	91	92	35	1/2	55	13	233	116.5	194	124	35	28	35
Ø100	78	35	M30XP1.5	45	20	32	37	37	117	117	50	1/2	80	13	258	129	222	142	38	30	40
Ø125	85	50	M40XP2.0	55	25	31	40	40	120	120	50	1/2	80	15	272	136	255	175	40	32	40

備註：

1.軸心加大如未註明長度尺寸時,依照本公司規定自行加工。
2.M0 行程未超過 1500mm時,活塞(PM)長度如附表,訂製行程如超過1500mm時,活塞長度參閱特性資料表。
3.M040~M050之行程超過500mm(含)以上時,軸心牙改為M18XP1.5。

1.The length and size of axis were not specifide to constructed must be according to our company design's modify without prior notice.
2.The MO series stroke exceed within (include)1500mm as see the property information of the length (PM) to order exceed stroke 1500mm.
3.MO40~MO50 stroke exceed (include) 500mm, axletree broaden be M18xP1.5.

ASHUN

方型鑄件油壓缸CA,CB尺寸圖
7Mpa Hydraulic Cylinders CA,CB Dimensional Features

MOB MOB+CA TYPE

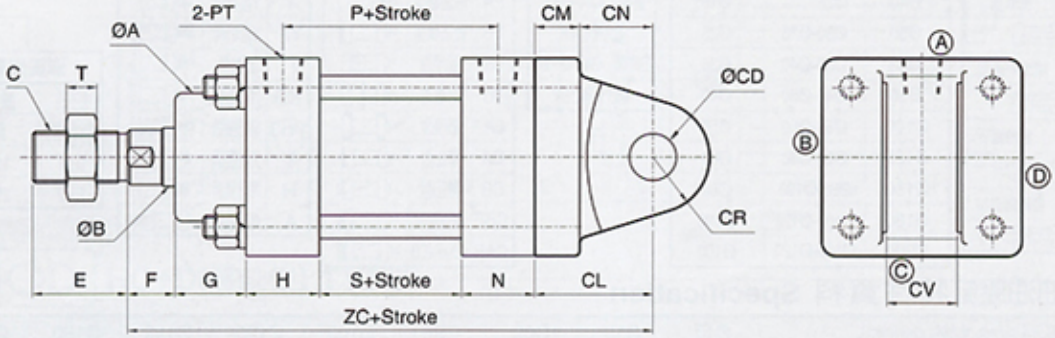

MOB MOB+CB TYPE

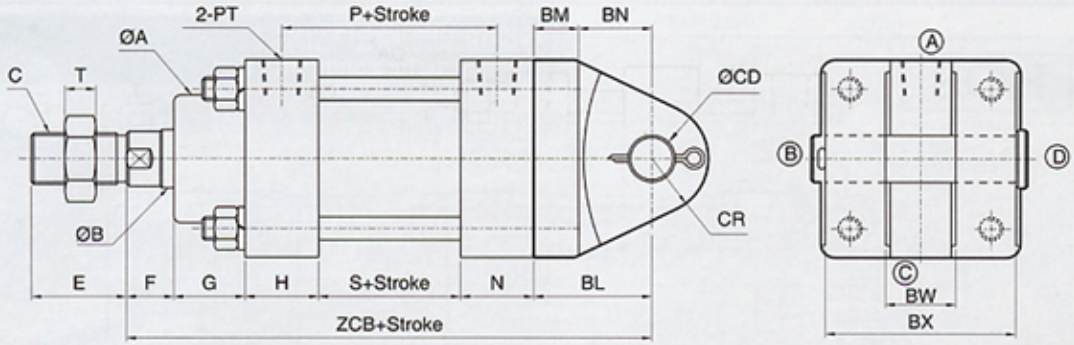

MOB TYPE																		CA TYPE				CB TYPE				
BORE \ SIZE	ØA	ØB	C	E	F	G	H	N	P	PM	PT	S	T	ZC	ZCB	ØCD	CR	CL	CM	CN	CV	BL	BM	BN	BW	BX
Ø30	30	16	M14XP1.5	28	13	15	25	25	75	30	1/4	50	8	159	162	10	10	31	11	20	16	34	12	22	16	48
Ø40	40	20	M16XP1.5	28	17	20	30	30	80	30	3/8	50	8	183	187	12	13	36	11	25	22	40	14	26	22	62
Ø50	45	20	M16XP1.5	28	17	20	30	28	79	30	3/8	50	8	181	185	12	13	36	12	24	22	40	14	26	22	68
Ø50A	55	25	M22XP1.5	40	20	30	30	28	79	30	3/8	50	13	194	198	12	13	36	12	24	22	40	14	26	22	68
Ø63	55	25	M22XP1.5	40	20	30	31	31	81	30	3/8	50	13	212	212	20	24	50	19	31	30	50	18	32	30	81
Ø80	62	30	M26XP1.5	40	20	32	37	35	91	35	1/2	55	13	247	247	30	30	68	18	50	30	68	18	50	31	61
Ø100	78	35	M30XP1.5	45	20	32	37	37	117	50	1/2	80	13	279	279	35	35	73	18	55	35	73	18	55	36	76
Ø125	85	50	M40XP2.0	55	25	31	40	40	120	50	1/2	80	15	289	289	35	35	73	18	55	35	73	18	55	36	76

備註：

1.軸心加大如未註明長度尺寸時,軸心尺寸依照本公司規定自行加工。
2.M0 行程未超過 1500mm時,活塞(PM)長度如附表,訂製行程如超過1500mm時,活塞長度參閱特性資料表。
3.M040~M050之行程超過500mm(含)以上時,軸心牙改為M18XP1.5。
4.M0系列Ø30-Ø125標準CA配件為鑄造成形(材質FCD-45),另有鐵製焊接(材質SS41)可供選擇。
5.M0系列Ø30-Ø63標準CB配件為鑄造成形(材質FCD-45),另有鐵製焊接(材質SS41)可供選擇。
6.M0系列Ø80-Ø125標準CB配件為鐵製焊接(材質SS41)式。

1.The length and size of axis were not specifide to constructed must be according to our company design's modify without prior notice.
2.The MO series stroke exceed within (include)1499mm as see the property information of the length (PM) to order exceed stroke 1500mm.
3.MO40~MO50 stroke exceed (include) 500mm, axletree broaden be M18xP1.5.
4.MO series Ø30~Ø125 of CA standard accessories is cast type. (material:FCD-45) and iron type (SS41) for optional.
5.MO series Ø30~Ø63 of CB standard accessories is cast type (material FCD-45) and material iron SS41 of welding type for optional.
6.MO series Ø80~Ø125 of CB standard accessories is iron welding type. (material SS41).

HO- 方型重油油壓缸系列(14Mpa) Hydraulic Cylinders Series

P. 62

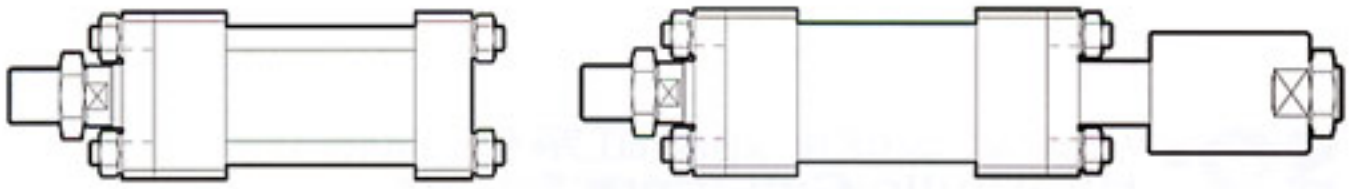

HOB HO+B(標準型)TYPE HOD HO+D (雙軸型) TYPE
HOD HOD+AST (雙軸型附可調帽) TYPE ..... P. 63

HOB HOB+FA TYPE HOD HOD+FA TYPE ..... P. 64

HOB HOB+FB TYPE HOD HOD+FB TYPE ..... P. 65

HOB HOB+TA TYPE HOD HOD+TA TYPE ..... P. 66

HOB HOB+LA TYPE HOD HOD+LA TYPE ..... P. 67

HOB HOB+LB (架) TYPE HOD HOB+LB TYPE ..... P. 68

HOB HOB+TC TYPE HOD HOD+TC TYPE ..... P. 69

HOB HOB+CA TYPE HOB HOB+CB TYPE ..... P. 70

Series HO□

方型重油油壓缸採購指南 14Mpa Hydraulic Cylinders How to order

HOBR 63 * Ø35 * 100ST LB + Y + PPV + Es2

型 式 TYPE	
HOB	標準型
HOBR	標準附磁型
HOD	雙軸型
HODR	雙軸附磁型

缸內徑 CYLINDER BORE	軸心 ROD 標準-最大	緩衝用軸心 標準
Ø40	Ø25	Ø18
Ø50	Ø30-Ø35	Ø25
Ø63	Ø35-Ø40	Ø35
Ø80	Ø40-Ø50	Ø40
Ø100	Ø50-Ø60	Ø50
Ø125	Ø60-Ø80	Ø60
Ø150	Ø80-Ø100	Ø80
Ø180	Ø100-Ø120	Ø100
Ø200	Ø100-Ø120	Ø100

行 程 STROKE	
鋼管	Ø40-Ø200
最大重程4米	
白鐵管	Ø40-Ø100
最大重程2.8米	

缸體固定型式 ACCESSORY	
FA	前法蘭型
FB	後法蘭型
LB	腳座型
TC	耳軸型
LA	腳座型
CA	單山型
CB	雙山型
CBP	CB附PIN
CAB	CA+P+CB

軸心固定型式 ACCESSORY	
Y	Y型接頭
YP	Y附PIN
I	I型接頭
KG	浮動接頭
PHS	魚眼接頭
T	T型接頭
H	焊套接頭
A	可調螺帽

無記號	不附緩衝
PPV	附緩衝

磁簧開關	
記號	數量
無記號	無
Es1	1個
Es2	2個

方型重油油壓缸特性資料 Specification

油壓缸內徑 Bore sizes of cylinder(mm)	Ø40	Ø50	Ø63	Ø80	Ø100	Ø125	Ø150	Ø180	Ø200
工作媒介 Power fluid	以濾清之標準液壓油 Filtered oil								
缸管材質 Material of cylinder bareel	碳鋼管 Carbon steel STKM-13C/白鐵管 Stainless tubes SUS 304								
使用壓力範圍 The range of pressure(MPa)	0.3-14MPa(3-140kg/cm²)								
使用溫度範圍 The range of temperature(°C)	-10°~+60°(C°)								
使用速度範圍 The range of speed(mm/sec)	8~300(mm/sec)								
緩衝行程(Cushion stroke) mm	20	25	25	30	35	40	45	50	55
訂製行程超過1501~2500mm以上時,活塞(PM)長度為	60	70	70	80	100	100	100	140	140
訂製行程超過2501~4000mm以上時,活塞(PM)長度為	120	140	140	150	180	180	180	200	200

方型重油油壓缸結構圖 Inside Structure and Parts List

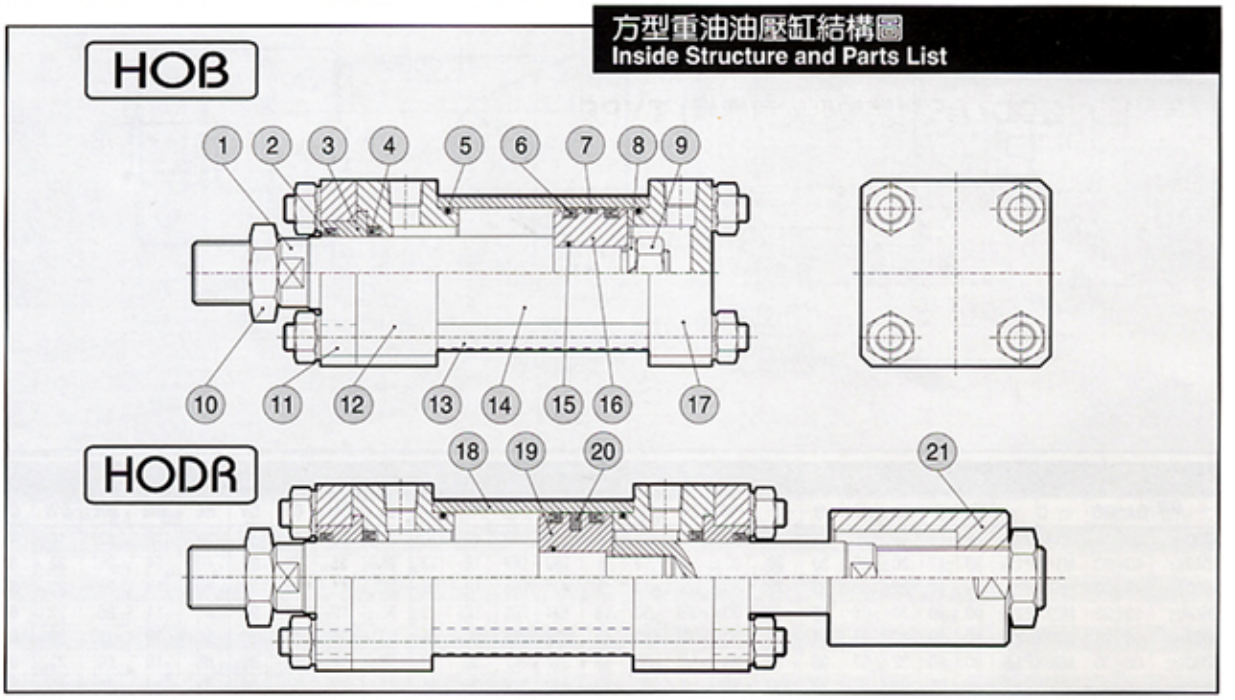

NO	零件名	Part mane	數量 Quantity	NO	零件名	Part mane	數量 Quantity	NO	零件名	Part mane	數量 Quantity
1	活塞桿	Piston rod	1	8	彈簧華司	Spring washer	1	15	O型環	Gasket	1
2	刮油環	Dust wiper	1	9	螺帽	Nut	1	16	活塞本體	Piston	1
3	套銅	Rod bush	1	10	軸心螺帽	Rod nut	1	17	後蓋	End cover	1
4	軸用油封	Rod packiog	1	11	銅壓板	End plate	1	18	油缸本體	Cylinder tube	1
5	O型環	Gasket	2	12	前蓋	Rod cover	1	19	活塞本體	Piston	1
6	橡膠活塞環	Piston packing	2	13	固定柱子	Tie bolt	4	20	磁石	Magnet	1
7	耐磨環	Wearing ring	1	14	油缸本體	Cylinder tube	1	21	可調螺帽	Adjustble nut	1

方型重油油壓缸尺寸圖
14Mpa Hydraulic Cylinders Dimensional Features

HOB HO+B(標準型) TYPE

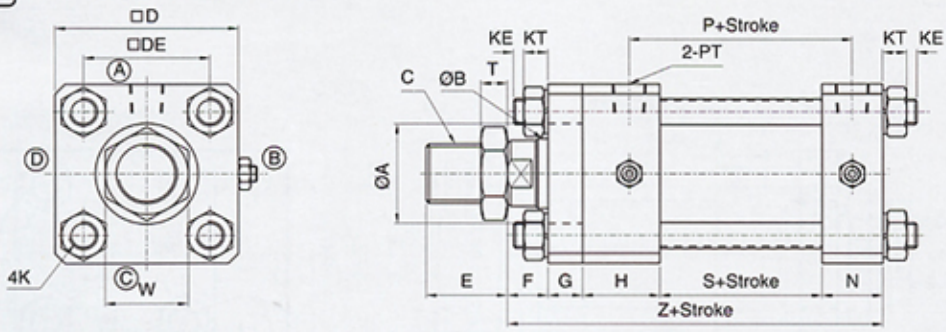

HOD HO+D(雙軸型) TYPE

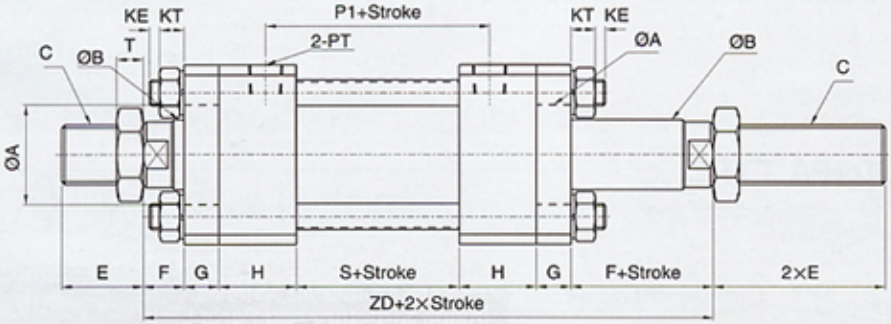

HOD HOD+AST(雙軸型附可調帽) TYPE

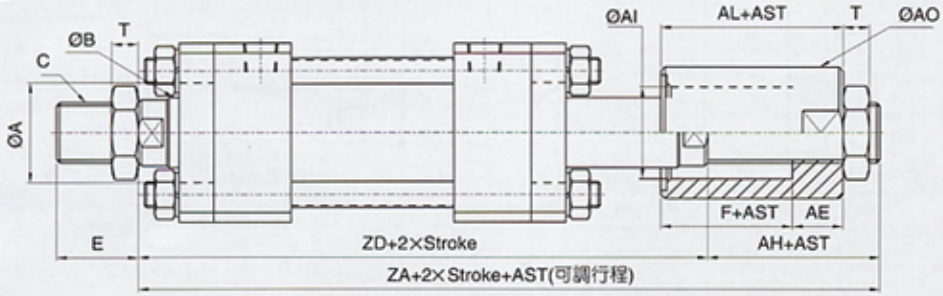

HOB-HOD TYPE | **A(可調行程) TYPE**

BORE \ SIZE	ØA	ØB	C	□D	□DE	E	F	G	H	N	P	P1	PM	PT	K	KE	KT	S	T	W	Z	ZD	ZA	AH	AE	ØAI	ØAO	AL
Ø40	40	25	M22XP1.5	65	45	40	20	17	33	28	76	74	30	3/8	M10XP1.25	10	10.5	50	13	32	148	190	225	35	20	30	45	40
Ø50	50	30	M26XP1.5	80	56	40	20	17	38	30	85	85	35	3/8	M12XP1.5	10	13	55	13	35	160	205	245	40	25	37	55	45
Ø63	50	35	M30XP1.5	90	62	45	20	17	38	30	85	85	35	3/8	M14XP1.5	10	14.5	55	13	41	160	205	245	40	25	42	60	45
Ø80	60	40	M30XP1.5	110	80	45	20	20	38	35	107	105	50	1/2	M16XP1.5	10	17	75	13	41	188	231	276	45	30	47	70	50
Ø100	80	50	M40XP2.0	131	95	55	25	20	41	37	1235	120	60	1/2	M18XP1.5	10	19.5	90	15	55	213	262	307	45	30	57	90	55
Ø125	90	60	M50XP2.0	162	122	70	35	30	57	47	143	140	70	3/4	M22XP1.5	10	23.5	100	15	65	269	344	394	50	35	68	100	70
Ø150	110	80	M70XP2.0	195	144	80	35	30	60	50	135	130	60	3/4	1"-8UNC	15	31	90	20	90	265	340	400	60	40	90	120	75
Ø180	135	100	M90XP2.0	235	175	100	35	40	65	55	172	170	70	1	1,1/4"-8UNC	20	39	120	20	110	315	400	465	65	40	110	150	75
Ø200	135	100	M90XP2.0	262	193	100	40	40	65	60	175	70	70	1	1,1/4"-8UNC	20	39	120	20	110	325	410	475	65	40	110	150	80

備註：

1.軸心加大如未註明長度尺寸時,依照本公司規定自行加工。
2.HO 系列行程未超過1500mm時，活塞(PM)長度如附表,
訂製行程如超過1500mm時，活塞(PM)長度請參閱特性資料表。
3.本系列行程超過 2000(含)mm時,須加拉桿中間固定座。
4.本系列軸心螺牙規格M50mm(含)以上時,其外徑為圓形。
5.AST為客戶指定之可調行程。

1.The length and size of the axis were not specifide when being enlarged or reduced.
The size of the axis will be constructed according to the specification tablet.
2.When this series of stroke exceeds(includes) 1500mm, as see the property information for the length of the piston. Within 1500mm see the (PM) length of piston.
3.When this series of stroke exceeds(includes) 2000mm,the fixed base of the pull rod must be added in the middle.
4.The screw mut specification of this series of axis over M50 is round and W stands for its external diameter.
5.AST is the custom made adjustable stroke.

方型重油油壓缸FA板尺寸圖
14Mpa Hydraulic Cylinders FA Dimensional Features

HOB HOB+FA TYPE

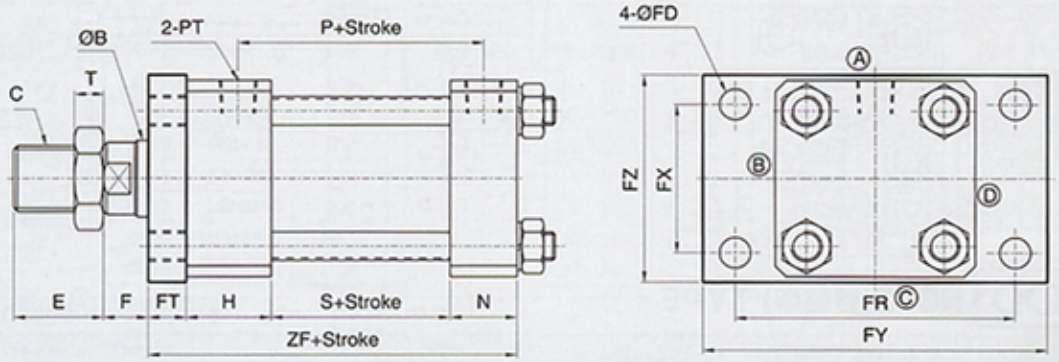

HOD HOD+FA TYPE

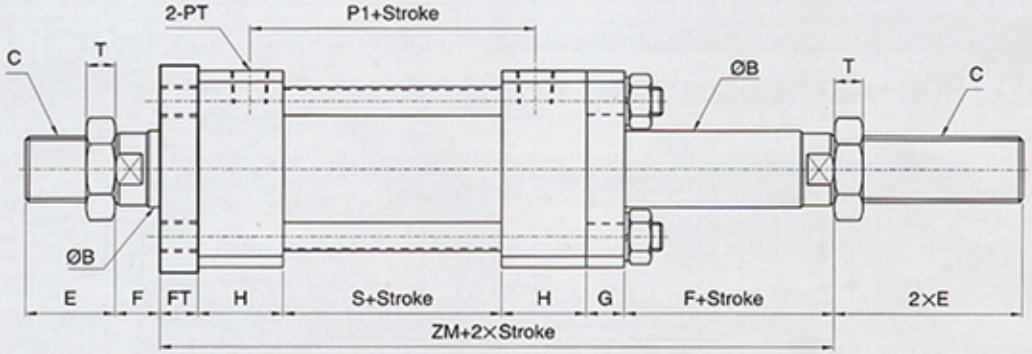

HOB-HOD TYPE																FA TYPE					
BORE \ SIZE	ØB	C	E	F	G	H	N	P	P1	PM	PT	S	T	ZF	ZM	ØFD	FT	FR	FX	FY	FZ
Ø40	25	M22XP1.5	40	20	17	33	28	76	74	30	3/8	50	13	128	170	12	17	93	50	115	75
Ø50	30	M26XP1.5	40	20	17	38	30	85	85	35	3/8	55	13	140	185	14	17	110	56	150	85
Ø63	35	M30XP1.5	45	20	17	38	30	85	85	35	3/8	55	13	140	185	14	17	126	68	155	95
Ø80	40	M30XP1.5	45	20	20	38	35	107	105	50	1/2	75	13	168	211	18	20	152	75	190	120
Ø100	50	M40XP2.0	55	25	20	41	37	123.5	120	60	1/2	90	15	188	237	20	20	180	100	220	140
Ø125	60	M50XP2.0	70	35	30	57	47	143	140	70	3/4	100	15	234	309	24	30	222	122	280	170
Ø150	80	M70XP2.0	80	35	30	60	50	135	130	60	3/4	90	20	230	305	28	30	260	155	310	206
Ø180	100	M90XP2.0	100	35	40	65	55	172	170	70	1	120	20	280	365	35	40	315	188	375	250
Ø200	100	M90XP2.0	100	40	40	65	60	175	170	70	1	120	20	285	370	35	40	355	207	425	272

備註：

1.軸心加大如未註明長度尺寸時,依照本公司規定自行加工。
2.H0 系列行程未超過 1500mm時,活塞(PM)長度如附表,
訂製行程如超過1500mm時,活塞長度請參閱特性資料表。
3.本系列軸心螺帽規格M50mm(含)以上時,其外徑為圓形。

1.The length and size of the axis were not specifide when being enlarged or reduced. The size of the axis will be constructed according to the specification tablet.
2.When this series of stroke exceeds(includes) 1500mm, as see the property information for the length of the piston. Within 1500mm see the (PM) length of piston.
3.The screw mut specification of this series of axis over M50 is round and W stands for its external diameter.

ASHUN

方型重油油壓缸FB板尺寸圖
14Mpa Hydraulic Cylinders FB Dimensional Features

HOB HOB+FB TYPE

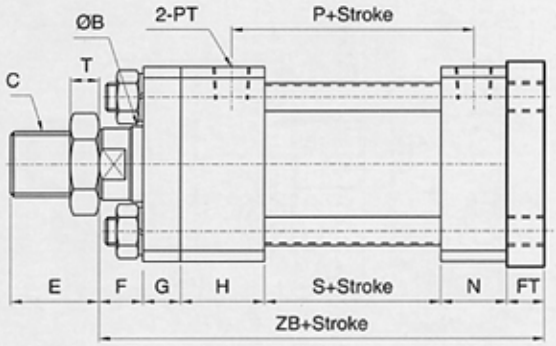

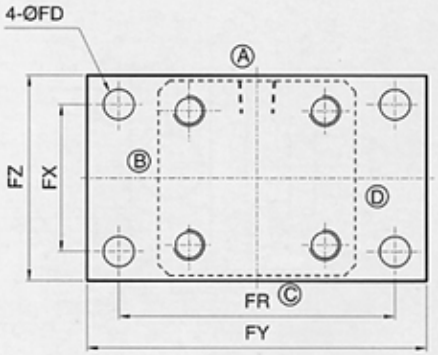

HOD HOD+FB TYPE

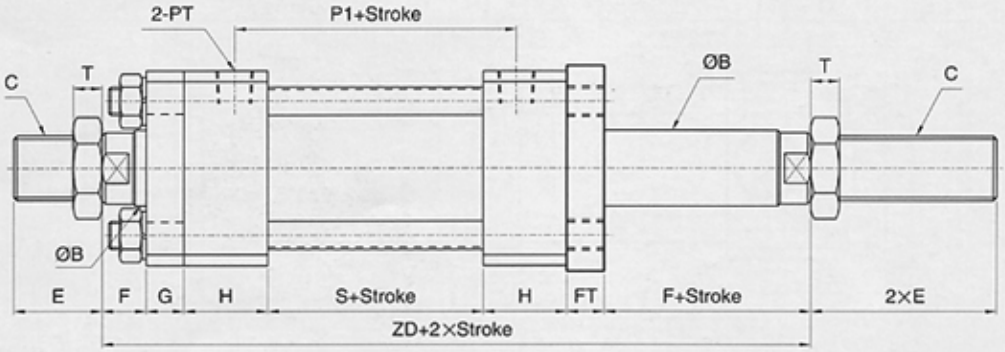

HOB-HOD TYPE																FB TYPE					
BORE \ SIZE	ØB	C	E	F	G	H	N	P	P1	PM	PT	S	T	ZB	ZD	ØFD	FT	FR	FX	FY	FZ
Ø40	25	M22XP1.5	40	20	17	33	28	76	74	30	3/8	50	13	165	190	12	17	93	50	115	75
Ø50	30	M26XP1.5	40	20	17	38	30	85	85	35	3/8	55	13	177	205	14	17	110	56	150	85
Ø63	35	M30XP1.5	45	20	17	38	30	85	85	35	3/8	55	13	177	205	14	17	126	68	155	95
Ø80	40	M30XP1.5	45	20	20	38	35	107	105	50	1/2	75	13	208	231	18	20	152	75	190	120
Ø100	50	M40XP2.0	55	25	20	41	37	123.5	120	60	1/2	90	15	233	262	20	20	180	100	220	140
Ø125	60	M50XP2.0	70	35	30	57	47	143	140	70	3/4	100	15	299	344	24	30	222	122	280	170
Ø150	80	M70XP2.0	80	35	30	60	50	135	130	60	3/4	90	20	295	340	28	30	260	155	310	206
Ø180	100	M90XP2.0	100	35	40	65	55	172	170	70	1	120	20	355	400	35	40	315	188	375	250
Ø200	100	M90XP2.0	100	40	40	65	60	175	170	70	1	120	20	365	410	35	40	355	207	425	272

備註：

1.本系列軸心加大或縮小時如未註明長度尺寸時,依照本公司規定自行加工。
2.HO 系列行程未超過 1500mm時,活塞(PM)長度如附表,訂製行程如超過 1500mm時,活塞長度請參閱特性資料表。
3.本系列軸心螺帽規格M50mm(含)以上時,其外徑為圓形。

1.The length and size of the axis were not specifide when being enlarged or reduced. The size of the axis will be constructed according to the specification tablet.
2.When this series of stroke exceeds(includes) 1500mm, as see the property information for the length of the piston. Within 1500mm see the (PM) length of piston.
3.The screw mut specification of this series of axis over M50 is round and W stands for its external diameter.

方型重油油壓缸TA尺寸圖
14Mpa Hydraulic Cylinders TA Dimensional Features

HOB HOB+TA TYPE

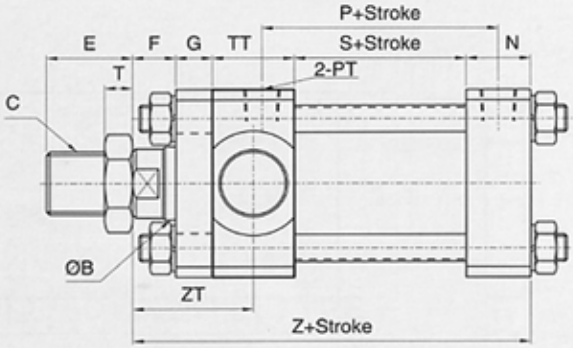

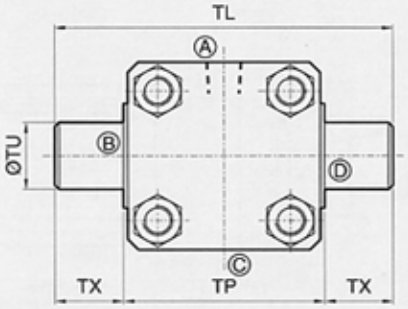

HOD HOD+TA TYPE

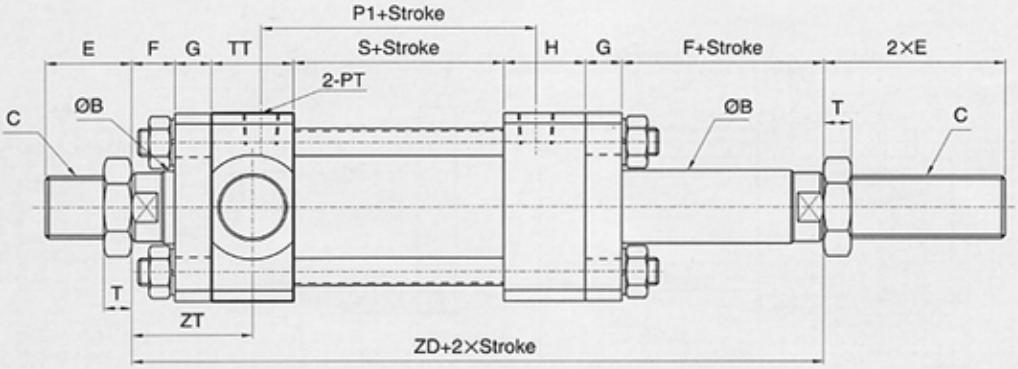

HOB-HOD TYPE																	TA TYPE				
BORE \ SIZE	ØB	C	E	F	G	H	N	P	P1	PM	PT	S	T	Z	ZD	ZT	ØTU	TL	TP	TT	TX
Ø40	25	M22XP1.5	40	20	17	33	28	76	74	30	3/8	50	13	148	190	53.5	20	109	69	33	20
Ø50	30	M26XP1.5	40	20	17	38	30	85	85	35	3/8	55	13	160	205	56	25	134	84	38	25
Ø63	35	M30XP1.5	45	20	17	38	30	85	85	35	3/8	55	13	160	205	56	30	154	94	38	30
Ø80	40	M30XP1.5	45	20	20	38	35	107	105	50	1/2	75	13	188	231	59	30	174	114	38	30
Ø100	50	M40XP2.0	55	25	20	41	37	123.5	120	60	1/2	90	15	213	262	65.5	35	205	135	41	35
Ø125	60	M50XP2.0	70	35	30	57	47	143	140	70	3/4	100	15	269	344	93.5	45	258	168	57	45
Ø150	80	M70XP2.0	80	35	30	60	50	135	130	60	3/4	90	20	265	340	95	50	300	200	60	50

備註：

1.本系列軸Ⓦ加大或縮小時如未註明長度尺寸時,依照本公司規定自行加工。
2.H0 系列行程未超過 1500mm時,活塞(PM)長度如附表,訂製行程如超過1500mm時,活塞長度請參閱特性資料表。
3.本系列行程若超過 2000mm(含)時,須加拉桿中間固定座
4.本系列軸Ⓦ螺帽規格M50mm(含)以上時,其外徑為圓形。

1.The length and size of the axis were not specifide when being enlarged or reduced. The size of the axis will be constructed according to the specification tablet.
2.When this series of stroke exceeds(includes) 1500mm, as see the property information for the length of the piston. Within 1500mm see the (PM) length of piston.
3.When this series of stroke exceeds(includes) 2000mm,the fixed base of the pull rod must be added in the middle.
4.The screw mut specification of this series of axis over M50 is round and W stands for its external diameter.

ASHUN

方型重油油壓缸LA尺寸圖
14Mpa Hydraulic Cylinders LA Dimensional Features

HOB HOB+LA TYPE

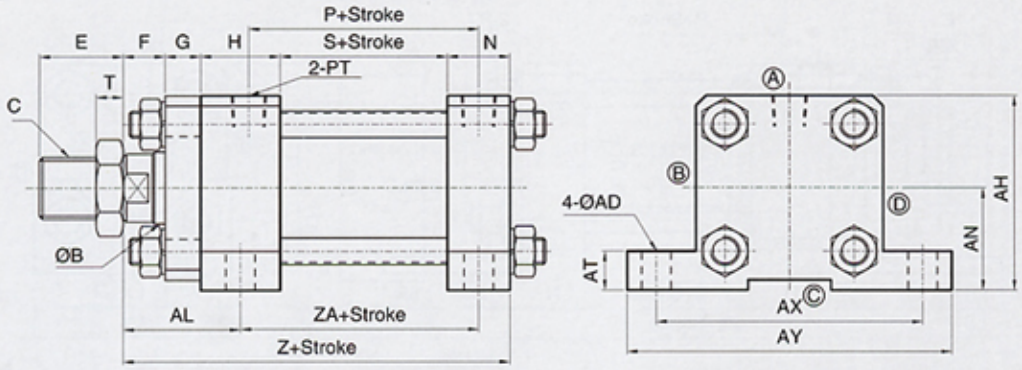

HOD HOD+LA TYPE

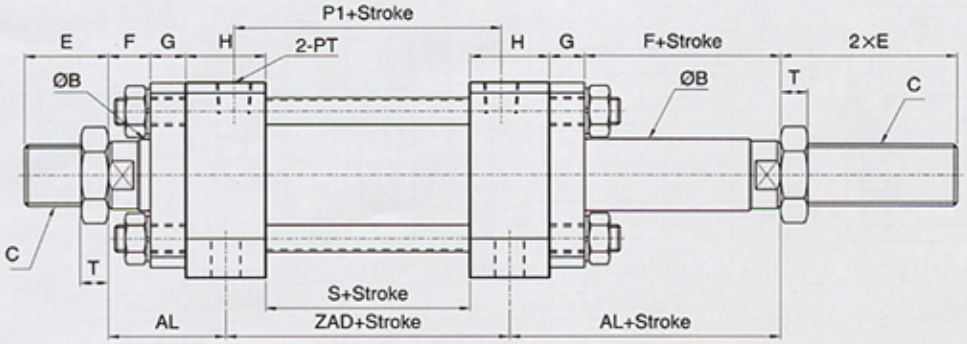

HOB-HOD TYPE																				LA TYPE			
BORE \ SIZE	ØB	C	E	F	G	H	N	AH	AL	AN	P	P1	PM	PT	S	T	ZA	ZAD	Z	ØAD	AT	AX	AY
Ø40	25	M22XP1.5	40	20	17	33	28	69.5	53.5	37	76	74	30	3/8	50	13	80.5	83	148	12	14	90	112
Ø50	30	M26XP1.5	40	20	17	38	30	85	56	45	85	85	35	3/8	55	13	89	93	160	14	17	115	140
Ø63	35	M30XP1.5	45	20	17	38	30	95	56	50	85	85	35	3/8	55	13	89	93	160	14	19	128	156
Ø80	40	M30XP1.5	45	20	20	38	35	115	59	60	107	105	50	1/2	75	13	111.5	113	188	18	25	152	184
Ø100	50	M40XP2.0	55	25	20	41	37	135.5	65.5	70	123.5	120	60	1/2	90	15	129	131	213	21	27	178	210
Ø125	60	M50XP2.0	70	35	30	57	47	171	93.5	90	143	140	70	3/4	100	15	152	157	269	24	30	230	280
Ø150	80	M70XP2.0	80	35	30	60	50	208	95	113	135	130	60	3/4	90	20	145	150	265	28	35	270	325
Ø180	100	M90XP2.0	100	35	40	65	55	260.5	107.5	143	172	170	70	1	120	20	180	185	315	35	45	330	395
Ø200	100	M90XP2.0	100	40	40	65	60	292	112.5	161	175	170	70	1	120	20	182.5	185	325	35	50	360	430

備註：

1.本系列軸心加大或縮小時如未註明長度尺寸時,依照本公司規定自行加工。
2.HO 系列行程未超過 1500mm時,活塞(PM)長度如附表,訂製行程如超過1500mm時,活塞長度請參閱特性資料表。
3.本系列行程若超過 2000mm(含)時,須加拉桿中間固定座
4.本系列軸心螺牙規格M50mm(含)以上時,其外徑為圓形。

1.The length and size of the axis were not specifide when being enlarged or reduced. The size of the axis will be constructed according to the specification tablet.
2.When this series of stroke exceeds(includes) 1500mm, as see the property information for the length of the piston. Within 1500mm see the (PM) length of piston.
3.When this series of stroke exceeds(includes) 2000mm,the fixed base of the pull rod must be added in the middle.
4.The screw mut specification of this series of axis over M50 is round and W stands for its external diameter.

方型重油油壓缸LB架尺寸圖
14Mpa Hydraulic Cylinders LB Dimensional Features

HOB HOB+LB TYPE

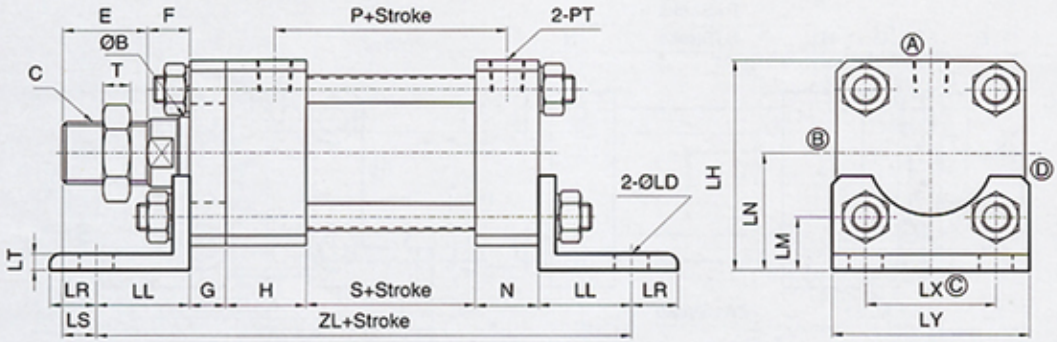

HOD HOD+LB TYPE

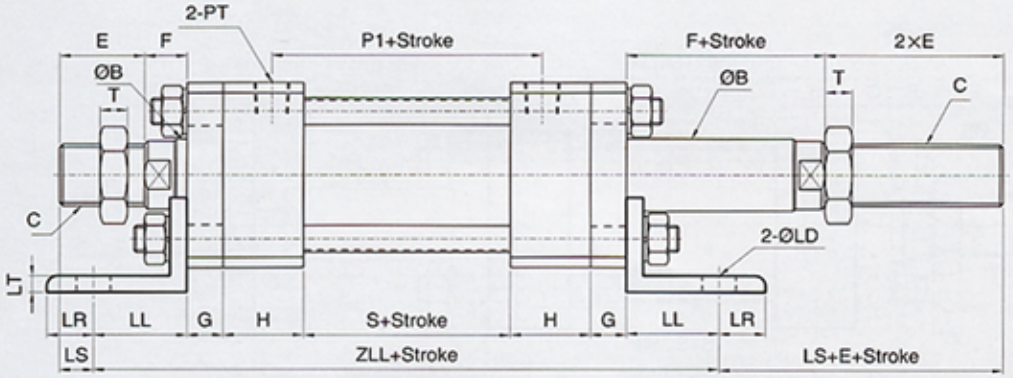

HOB-HOD TYPE																			LB TYPE						
BORE \ SIZE	ØB	C	E	F	G	H	N	LH	LN	LS	P	P1	PM	PT	S	T	ZL	ZLL	ØLD	LL	LM	LR	LT	LX	LY
Ø40	25	M22XP1.5	40	20	17	33	28	78.5	46	22.5	76	74	30	3/8	50	13	203	225	11	37.5	23.5	12.5	6	45	68
Ø50	30	M26XP1.5	40	20	17	38	30	94	54	18	85	85	35	3/8	55	13	224	249	14	42	26	22	8	56	85
Ø63	35	M30XP1.5	45	20	17	38	30	102	57	21	85	85	35	3/8	55	13	228	253	16	44	26	22	8	62	95
Ø80	40	M30XP1.5	45	20	20	38	35	131	76	2	107	105	50	1/2	75	13	294	317	18	63	36	27	13	80	120
Ø100	50	M40XP2.0	55	25	20	41	37	158.5	93	14	123.5	120	60	1/2	90	15	320	344	20	66	45.5	24	15	100	140
Ø125	60	M50XP2.0	70	35	30	57	47	195	114	25	143	140	70	3/4	100	15	394	434	24	80	53	30	15	122	169
Ø150	80	M70XP2.0	80	35	30	60	50	220	125	35	135	130	60	3/4	90	20	390	430	28	80	53	30	20	144	200
Ø180	100	M90XP2.0	100	35	40	65	55	267.5	150	45	172	170	70	1	120	20	460	510	35	90	62.5	40	20	175	240
Ø200	100	M90XP2.0	100	40	40	65	60	301	170	45	175	170	70	1	120	20	475	520	35	95	73.5	40	25	193	265

備註：
1.本系列軸心加大或縮小時如未註明長度尺寸時,依照本公司規定自行加工。
2.H0 系列行程未超過 1500mm時,活塞(PM)長度如附表,訂製行程如超過 1500mm時,活塞長度請參閱特性資料表。
3.本系列行程若超過 2000mm(含)時,須加拉桿中間固定座
4.本系列軸心螺牙規格M50mm(含)以上時,其外徑為圓形。

1.The length and size of the axis were not specifide when being enlarged or reduced. The size of the axis will be constructed according to the specification tablet.
2.When this series of stroke exceeds(includes) 1500mm, as see the property information for the length of the piston. Within 1500mm see the (PM) length of piston.
3.When this series of stroke exceeds(includes) 2000mm,the fixed base of the pull rod must be added in the middle.
4.The screw mut specification of this series of axis over M50 is round and W stands for its external diameter.

方型重油油壓缸TC尺寸圖
14Mpa Hydraulic Cylinders TC Dimensional Features

HOB HOB+TC TYPE

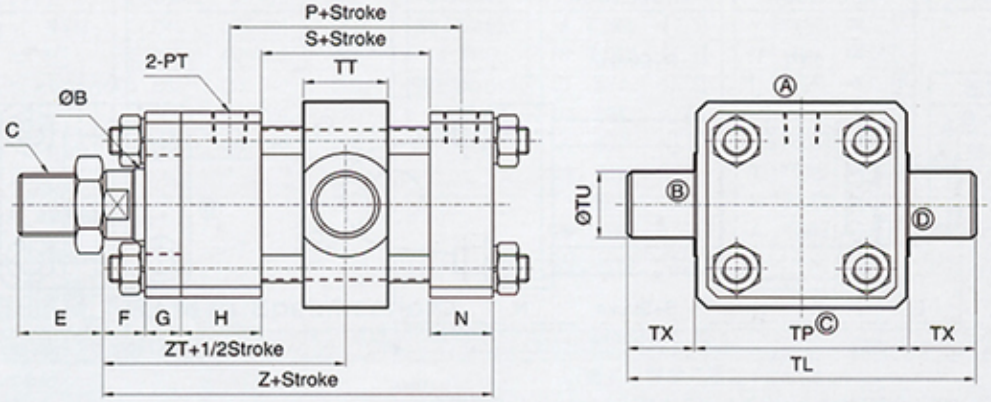

HOD HOD+TC TYPE

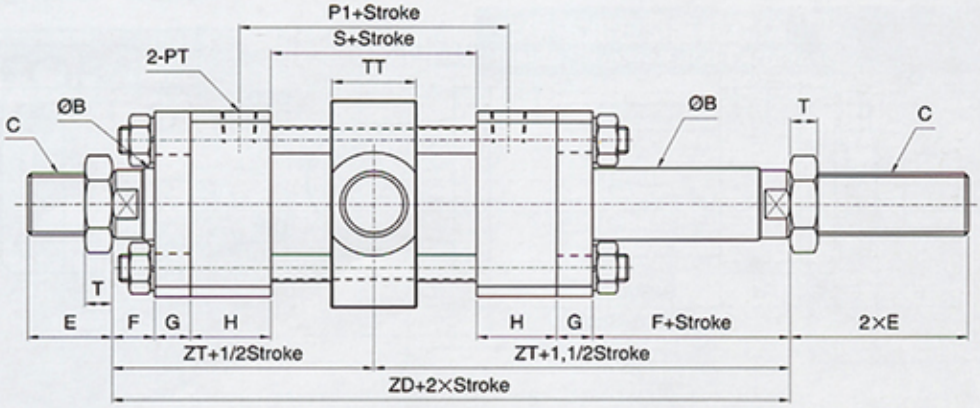

HOB-HOD TYPE																	TC TYPE				
BORE \ SIZE	ØB	C	E	F	G	H	N	P	P1	PM	PT	S	T	Z	ZD	ZT	ØTU	TL	TP	TT	TX
Ø40	25	M22XP1.5	40	20	17	33	28	76	74	30	3/8	50	13	148	190	95	20	115	75	28	20
Ø50	30	M26XP1.5	40	20	17	38	30	85	85	35	3/8	55	13	160	205	102.5	25	140	90	33	25
Ø63	35	M30XP1.5	45	20	17	38	30	85	85	35	3/8	55	13	160	205	102.5	32	166	102	40	32
Ø80	40	M30XP1.5	45	20	20	38	35	107	105	50	1/2	75	13	188	231	115.5	32	184	120	43	32
Ø100	50	M40XP2.0	55	25	20	41	37	123.5	120	60	1/2	90	15	213	262	131	40	220	140	53	40
Ø125	60	M50XP2.0	70	35	30	57	47	143	140	70	3/4	100	15	269	344	172	50	275	175	58	50
Ø150	80	M70XP2.0	80	35	30	60	50	135	130	60	3/4	90	20	265	340	170	60	326	206	73	60
Ø180	100	M90XP2.0	100	35	40	65	55	172	170	70	1	120	20	315	400	200	80	403	243	98	80
Ø200	100	M90XP2.0	100	40	40	65	60	175	170	70	1	120	20	325	410	205	90	452	272	108	90

備註：

1.本系列軸心加大或縮小時如未註明長度尺寸時,依照本公司規定自行加工。
2.H0 系列行程未超過 1500mm時,活塞(PM)長度如附表,訂製行程如超過 1500mm時,活塞長度請參閱特性資料表。
3.本系列軸心螺帽規格M50mm(含)以上時,其外徑為圓形。

1.The length and size of the axis were not specifide when being enlarged or reduced. The size of the axis will be constructed according to the specification tablet.
2.When this series of stroke exceeds(includes) 1500mm, as see the property information for the length of the piston. Within 1500mm see the (PM) length of piston.
3.The screw mut specification of this series of axis over M50 is round and W stands for its external diameter.

Series
HO-CA,CB

方型重油油壓缸CA,CB尺寸圖
14Mpa Hydraulic Cylinders CA,CB Dimensional Features

HOB HOB+CA TYPE

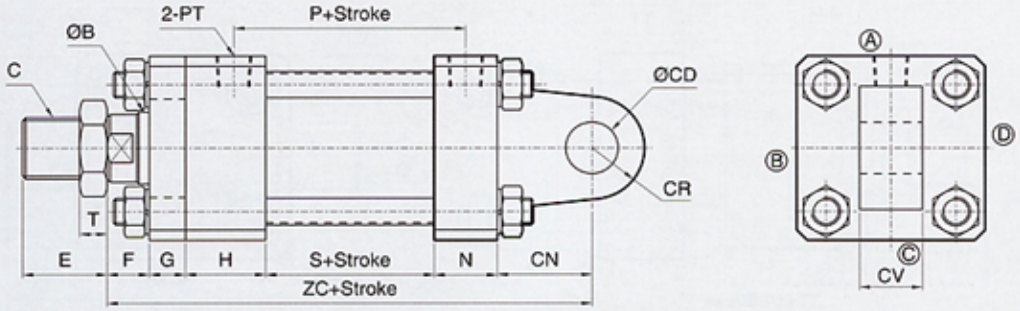

HOB HOB+CB TYPE

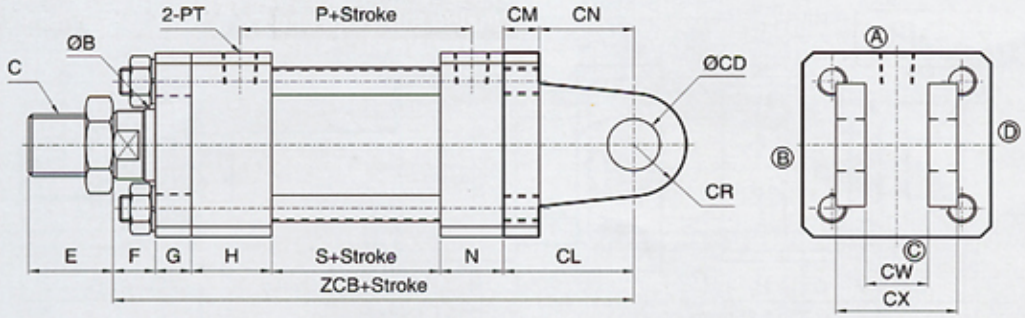

HOB TYPE															CA-CB TYPE							
BORE \ SIZE	ØB	C	E	F	G	H	N	P	PM	PT	S	T	ZC	ZCB	ØCD	CL	CM	CN	CR	CV	CW	CX
Ø40	25	M22XP1.5	40	20	17	33	28	76	30	3/8	50	13	173	190	16	42	17	25	15	22	23	47
Ø50	30	M26XP1.5	40	20	17	38	30	85	35	3/8	55	13	195	212	20	52	17	35	20	22	23	47
Ø63	35	M30XP1.5	45	20	17	38	30	85	35	3/8	55	13	205	222	25	62	17	45	25	30	31	59
Ø80	40	M30XP1.5	45	20	20	38	35	107	50	1/2	75	13	238	258	30	70	20	50	30	35	36	76
Ø100	50	M40XP2.0	55	25	20	41	37	123.5	60	1/2	90	15	273	293	35	80	20	60	35	40	41	81
Ø125	60	M50XP2.0	70	35	30	57	47	143	70	3/4	100	15	339	369	50	100	30	70	50	55	56	106
Ø150	80	M70XP2.0	80	35	30	60	50	135	60	3/4	90	20	345	375	60	110	30	80	60	60	61	121
Ø180	100	M90XP2.0	100	35	40	65	55	172	70	1	120	20	415	455	80	140	40	100	80	80	81	161
Ø200	100	M90XP2.0	100	40	40	65	60	175	70	1	120	20	435	475	90	150	40	110	90	90	91	171

備註：
1.本系列軸心加大或縮小時如未註明長度尺寸時,依照本公司規定自行加工。
2.H0 系列行程未超過 1500mm時,活塞(PM)長度如附表,訂製行程如超過 1500mm時,活塞長度請參閱特性資料表。
3.本系列行程若超過 2000mm(含)時,須加拉桿中間固定座
4.本系列軸心螺帽規格M50mm(含)以上時,其外徑為圓形。

1.The length and size of the axis were not specifide when being enlarged or reduced. The size of the axis will be constructed according to the specification tablet.
2.When this series of stroke exceeds(includes) 1500mm, as see the property information for the length of the piston. Within 1500mm see the (PM) length of piston.
3.When this series of stroke exceeds(includes) 2000mm,the fixed base of the pull rod must be added in the middle.
4.The screw mut specification of this series of axis over M50 is round and W stands for its external diameter.

快速索引

QUICK INDEX

FO- 方型重油油壓缸系列(14Mpa)
Hydraulic Cylinders Series

P. 71

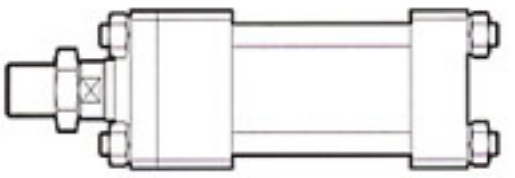

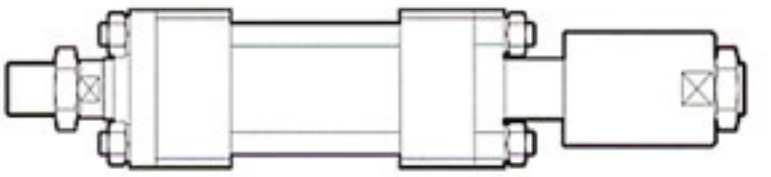

FOB FO+B(標準型)TYPE　FOD FO+D (雙軸型) TYPE
FOD FOD+AST (雙軸型附可調帽) TYPE ..... P. 72

FOB FOB+FA TYPE　FOD FOD+FA TYPE ..... P. 73

FOB FOB+FB TYPE　FOD FOD+FB TYPE ..... P. 74

FOB FOB+LA TYPE　FOD FOD+LA TYPE ..... P. 75

FOB FOB+LB TYPE　FOD FOD+LB TYPE ..... P. 76

FOB FOB+TC TYPE　FOD FOD+TC TYPE ..... P. 77

FOB FOB+CA TYPE　FOB FOB+CB TYPE ..... P. 78

FO □

方型重油油壓缸採購指南 14Mpa Hydraulic Cylinders How to order

FOBR 63 * Ø35 * 100ST LB + Y + PPV + Es2

型式 TYPE

FOB	標準型
FOBR	標準附磁型
FOD	雙軸型
FODR	雙軸附磁型

缸內徑 CYLINDER BORE	軸心ROD 標準-最大	緩衝用軸心 標準
Ø40	Ø20-Ø25	Ø18
Ø50	Ø25-Ø35	Ø25
Ø63	Ø30-Ø40	Ø35
Ø80	Ø40-Ø50	Ø40
Ø100	Ø50-Ø60	Ø50

行程 STROKE

鋼管	Ø40-Ø200
最大衝程4米	
白鐵管	Ø40-Ø100
最大衝程2.8米	

缸體固定型式 ACCESSORY

FA	前法蘭型
FB	後法蘭型
LB	腳座型
TC	耳軸型
LA	腳座型
CA	單山型
CB	雙山型
CBP	CB附PIN
CAB	CA+P+CB

軸心固定型式 ACCESSORY

Y	Y型接頭
YP	Y附PIN
I	I型接頭
KG	浮動接頭
PHS	魚眼接頭
T	T型接頭
H	焊套接頭
A	可調螺帽

無記號	不附緩衝
PPV	附緩衝

磁簧開關

記號	數量
無記號	無
Es1	1個
Es2	2個

方型重油油壓缸特性資料 Specification

油壓缸內徑 Bore sizes of cylinder(mm)	Ø40	Ø50	Ø63	Ø80	Ø100
工作媒介 Power fluid	以濾清之標準液壓油 Filtered oil				
缸管材質 Material of cylinder bareel	碳鋼管 Carbon steel STKM-13C/白鐵管 Stainless tubes SUS 304				
使用壓力範圍 The range of pressure(MPa)	0.3-14MPa(3-140kg/cm²)				
使用溫度範圍 The range of temperature(°C)	-10°~+60°(C°)				
使用速度範圍 The range of speed(mm/sec)	8~300(mm/sec)				
緩衝行程(Cushion stroke) mm	20	25	25	30	35
訂製行程超過1501~2500mm以上時,活塞(PM)長度為	80	80	90	90	100
訂製行程超過2501~4000mm以上時,活塞(PM)長度為	120	120	140	140	150

方型重油油壓缸結構圖 Inside Structure and Parts List

FOB

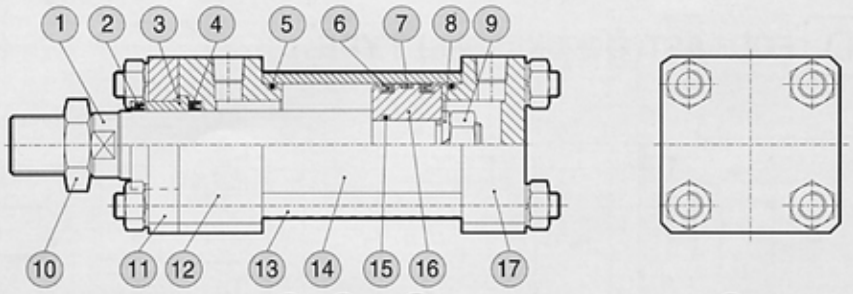

FODR

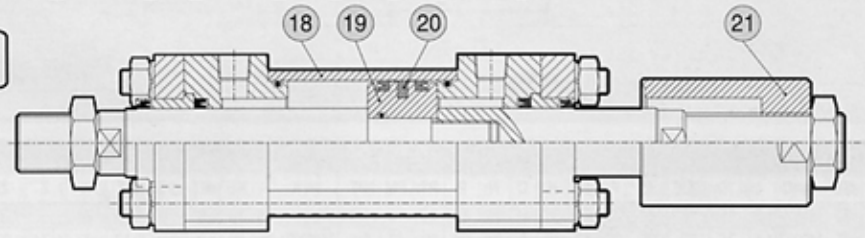

NO	零件名 Part mane		數量 Quantity	NO	零件名 Part mane		數量 Quantity	NO	零件名 Part mane		數量 Quantity
1	活塞桿	Piston rod	1	8	彈簧華司	Spring washer	1	15	O型環	Gasket	1
2	刮油環	Dust wiper	1	9	螺帽	Nut	1	16	活塞本體	Piston	1
3	套銅	Rod bush	1	10	軸心螺帽	Rod nut	1	17	後蓋	End cover	1
4	軸用油封	Rod packiog	1	11	鋼壓板	End plate	1	18	油缸本體	Cylinder tube	1
5	O型環	Gasket	2	12	前蓋	Rod cover	1	19	活塞本體	Piston	1
6	橡膠活塞環	Piston packing	2	13	固定柱子	Tie bolt	4	20	磁石	Magnet	1
7	耐磨環	Wearing ring	1	14	油缸本體	Cylinder tube	1	21	可調螺帽	Adjustble nut	1

Series
FOB,FOD

方型重油油壓缸尺寸圖
14Mpa Hydraulic Cylinders Dimensional Features

FOB FO+B(標準型) TYPE

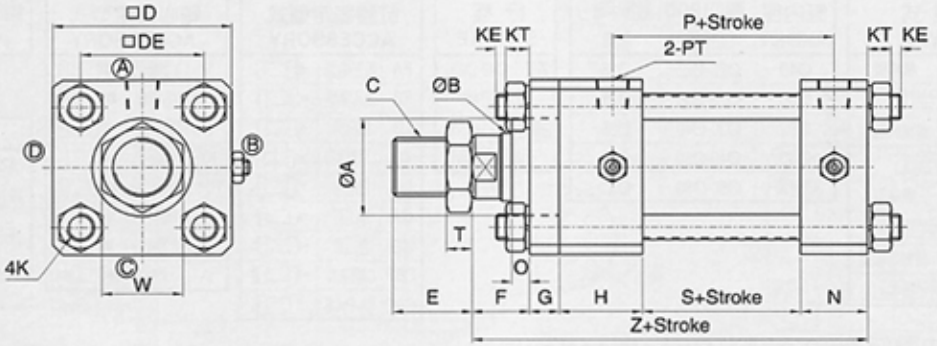

FOD FO+D(雙軸型) TYPE

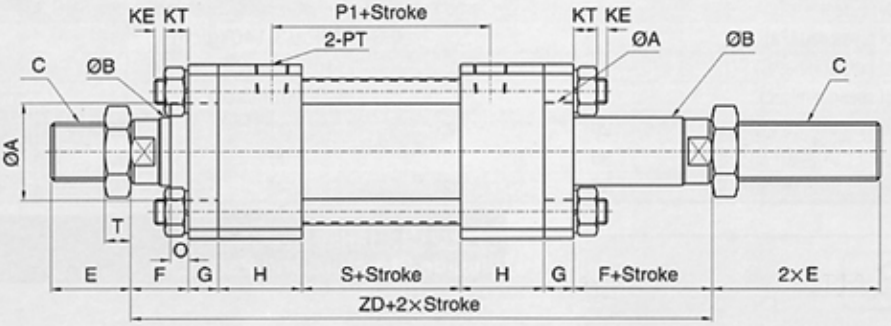

FOD FOD+AST(雙軸型附可調帽) TYPE

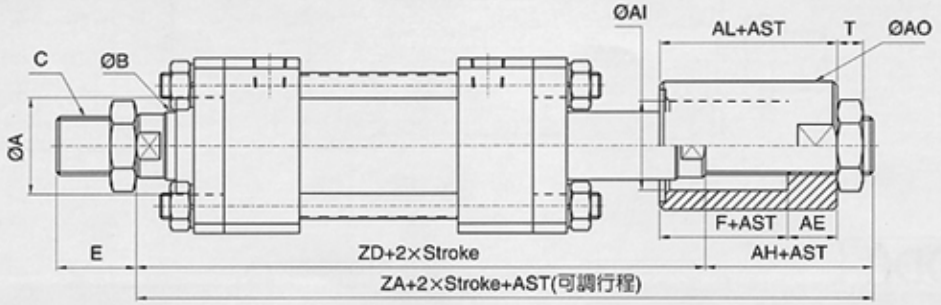

FOB-FOD TYPE — A(可調行程) TYPE

BORE \ SIZE	ØA	ØB	C	□D	□DE	E	F	G	H	O	N	P	P1	PM	PT	K	KE	KT	S	T	W	Z	ZD	ZA	AH	AE	ØAI	ØAO	AL
Ø40	35	20	M18XP1.5	65	45	30	25	11	36	11	26	88	90	40	1/4	M10XP1.25	10	8	60	8	26	158	204	234	30	20	25	40	45
Ø50	40	25	M22XP1.5	75	52	35	25	13	42	9	34	92	90	40	3/8	M10XP1.25	10	8	60	13	32	174	220	255	35	20	28	45	45
Ø63	45	30	M26XP1.5	90	63	40	30	15	42	9	34	97	95	45	3/8	M12XP1.5	10	10	65	13	41	186	239	279	40	25	38	55	55
Ø80	55	40	M36XP1.5	110	80	45	30	18	46	7	40	105	105	45	1/2	M16XP1.5	10	13	65	15	50	199	253	298	45	30	48	65	60
Ø100	65	50	M45XP2.0	135	102	50	40	20	50	7	40	114	114	50	1/2	M18XP1.5	10	15	74	15	65	224	294	339	45	30	60	80	70

備註：
1.本系列軸心加大或縮小時如未註明長度尺寸時,依照本公司規定自行加工。
2.FO 系列行程未超過 1500mm時,活塞(PM)長度如附表,訂製行程如超過 1500mm時,活塞長度請參閱特性資料表。
3.本系列行程若超過 2000mm(含)時,須加拉桿中間固定座
4.本系列軸心螺紋規格M50mm(含)以上時,其外徑為圓形。
5.AST 為客戶指定之可調行程。

1.The length and size of the axis were not specifide when being enlarged or reduced. The size of the axis will be constructed according to the specification tablet.
2.When this series of stroke exceeds(includes) 1500mm, as see the property information for the length of the piston. Within 1500mm see the (PM) length of piston.
3.When this series of stroke exceeds(includes) 2000mm,the fixed base of the pull rod must be added in the middle.
4.The screw mut specification of this series of axis over M50 is round and W stands for its external diameter.
5.AST is the custom made adjustable stroke.

ASHUN

方型重油油壓缸FA板尺寸圖
14Mpa Hydraulic Cylinders FA Dimensional Features

FOB FOB+FA TYPE

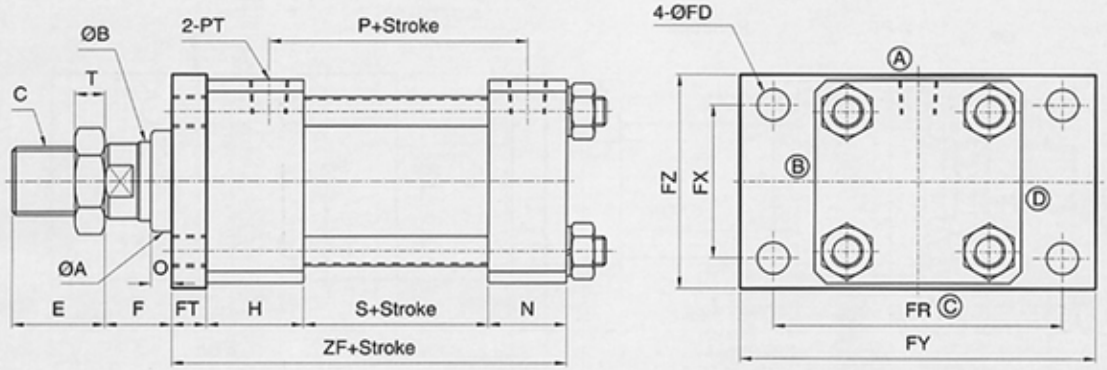

FOD FOD+FA TYPE

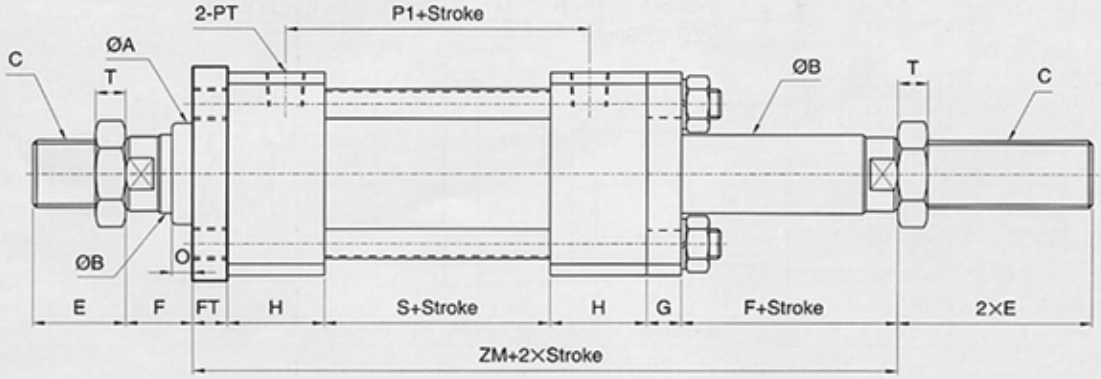

FOB-FOD TYPE																		FA TYPE					
BORE \ SIZE	ØA	ØB	C	E	F	G	H	O	N	P	P1	PM	PT	S	T	ZF	ZM	ØFD	FT	FR	FX	FY	FZ
Ø40	35	20	M18XP1.5	30	25	11	36	11	26	88	90	40	1/4	60	8	133	179	11	11	95	46	118	69
Ø50	40	25	M22XP1.5	35	25	13	42	9	34	92	90	40	3/8	60	13	149	195	11	13	115	58	145	85
Ø63	45	30	M26XP1.5	40	30	15	42	9	34	97	95	45	3/8	65	13	156	209	14	15	132	65	165	98
Ø80	55	40	M36XP1.5	45	30	18	46	7	40	105	105	45	1/2	65	15	169	223	18	18	155	87	190	118
Ø100	65	50	M45XP2.0	50	40	20	50	7	40	114	114	50	1/2	74	15	184	254	18	20	190	109	230	150

備註：

1.本系列軸心加大或縮小時如未註明長度尺寸時,依照本公司規定自行加工。
2.FO 系列行程未超過 1500mm時,活塞(PM)長度如附表,訂製行程如超過 1500mm時,活塞長度請參閱特性資料表。
3.本系列軸心螺帽規格M50mm(含)以上時,其外徑為圓形。

1.The length and size of the axis were not specifide when being enlarged or reduced. The size of the axis will be constructed according to the specification tablet.
2.When this series of stroke exceeds(includes) 1500mm, as see the property information for the length of the piston. Within 1500mm see the (PM) length of piston.
3.The screw mut specification of this series of axis over M50 is round and W stands for its external diameter.

方型重油油壓缸FB板尺寸圖
14Mpa Hydraulic Cylinders FB Dimensional Features

FOB FOB+FB TYPE

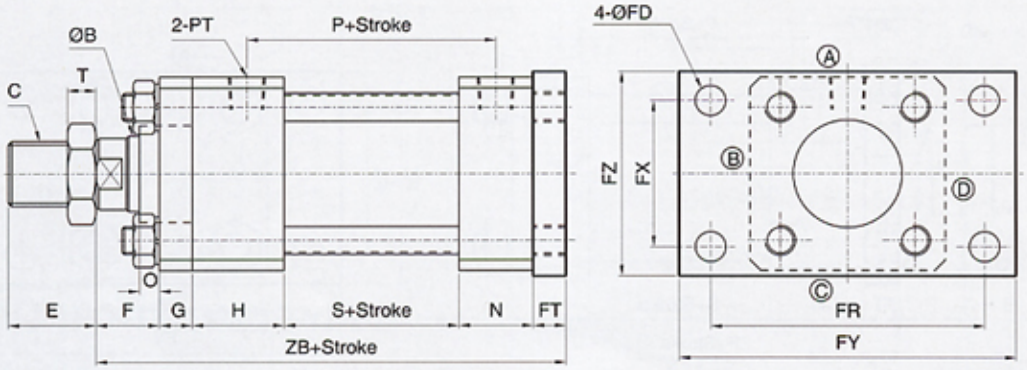

FOD FOD+FB TYPE

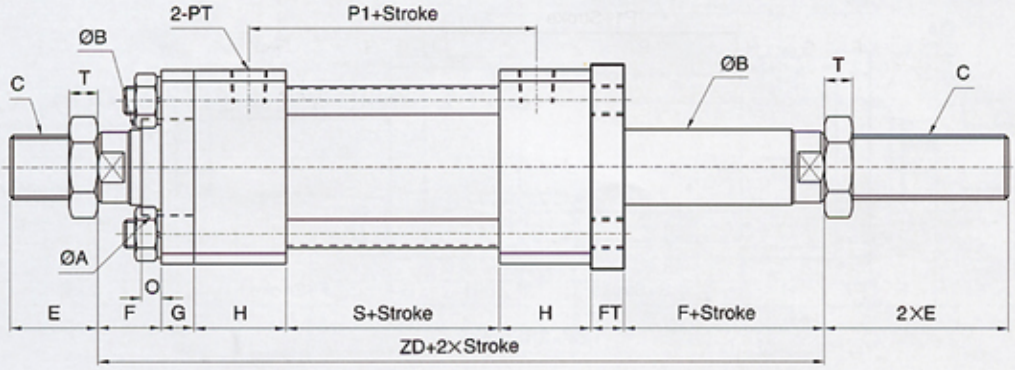

FOB-FOD TYPE																		FB TYPE					
BORE \ SIZE	ØA	ØB	C	E	F	G	H	O	N	P	P1	PM	PT	S	T	ZB	ZD	ØFD	FT	FR	FX	FY	FZ
Ø40	35	20	M18XP1.5	30	25	11	36	11	26	88	90	40	1/4	60	8	169	204	11	11	95	46	118	69
Ø50	40	25	M22XP1.5	35	25	13	42	9	34	92	90	40	3/8	60	13	187	220	11	13	115	58	145	85
Ø63	45	30	M26XP1.5	40	30	15	42	9	34	97	95	45	3/8	65	13	201	239	14	15	132	65	165	98
Ø80	55	40	M36XP1.5	45	30	18	46	7	40	105	105	45	1/2	65	15	217	253	18	18	155	87	190	118
Ø100	65	50	M45XP2.0	50	40	20	50	7	40	114	114	50	1/2	74	15	244	294	18	20	190	109	230	150

備註：
1.本系列軸心加大或縮小時如未註明長度尺寸時,依照本公司規定自行加工。
2.F0 行程未超過 1500mm時,活塞(PM)長度如附表,訂製行程如超過1500mm時,活塞長度請參閱特性資料表。
3.本系列軸心螺牙規格M50mm(含)以上時,其外徑為圓形。

1.The length and size of the axis were not specifide when being enlarged or reduced. The size of the axis will be constructed according to the specification tablet.
2.When this series of stroke exceeds(includes) 1500mm, as see the property information for the length of the piston. Within 1500mm see the (PM) length of piston.
3.The screw mut specification of this series of axis over M50 is round and W stands for its external diameter.

ASHUN

方型重油油壓缸LA尺寸圖
14Mpa Hydraulic Cylinders LA Dimensional Features

FOB FOB+LA TYPE

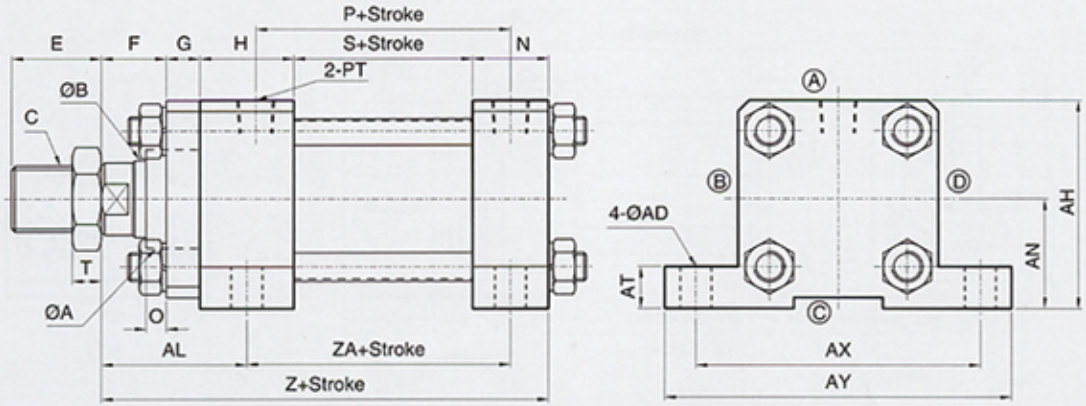

FOD FOD+LA TYPE

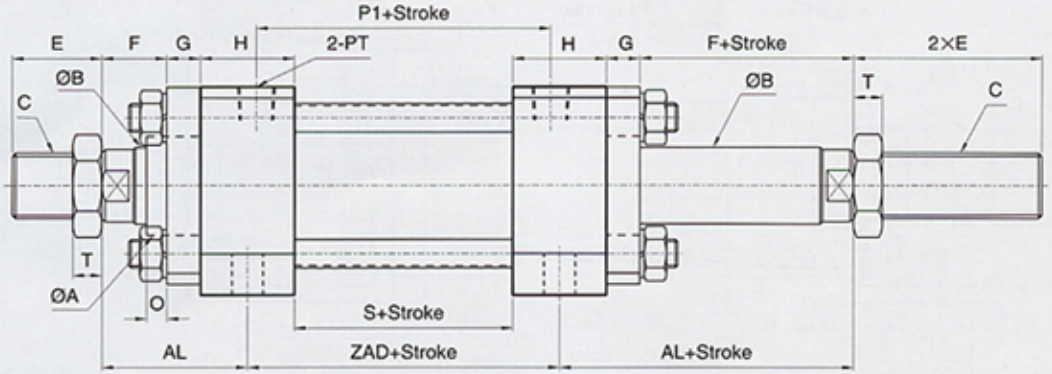

FOB-FOD TYPE																						LA TYPE			
BORE \ SIZE	ØA	ØB	C	E	F	G	H	O	N	AH	AL	AN	P	P1	PM	PT	S	T	ZA	ZAD	Z	ØAD	AT	AX	AY
Ø40	35	20	M18XP1.5	30	25	11	36	11	26	70	54	37.5	88	90	40	1/4	60	13	91	96	158	11	14	95	118
Ø50	40	25	M22XP1.5	35	25	13	42	9	34	80	59	42.5	92	90	40	3/8	60	13	98	102	174	11	17	115	145
Ø63	45	30	M26XP1.5	40	30	15	42	9	34	95	66	50	97	95	45	3/8	65	13	103	107	186	14	19	132	165
Ø80	55	40	M36XP1.5	45	30	18	46	7	40	115	71	60	105	105	45	1/2	65	13	108	111	199	18	25	155	190
Ø100	65	50	M45XP2.0	50	40	20	50	7	40	140	85	72.5	114	114	50	1/2	74	15	119	124	224	18	27	190	230

備註：

1.本系列軸心加大或縮小時如未註明長度尺寸時,依照本公司規定自行加工。
2.F0 系列行程未超過 1500mm時,活塞(PM)長度如附表,訂製行程如超過 1500mm時,活塞長度請參閱特性資料表。
3.本系列行程若超過2000mm(含)時,須加拉桿中間固定座。
4.本系列軸心螺帽規格M50mm(含)以上時,其外徑為圓形。

1.The length and size of the axis were not specifide when being enlarged or reduced. The size of the axis will be constructed according to the specification tablet.
2.When this series of stroke exceeds(includes) 1500mm, as see the property information for the length of the piston. Within 1500mm see the (PM) length of piston.
3.When this series of stroke exceeds(includes) 2000mm,the fixed base of the pull rod must be added in the middle.
4.The screw mut specification of this series of axis over M50 is round and W stands for its external diameter.

方型重油油壓缸LB架尺寸圖
14Mpa Hydraulic Cylinders LB Dimensional Features

FOB FOB+LB (架) TYPE

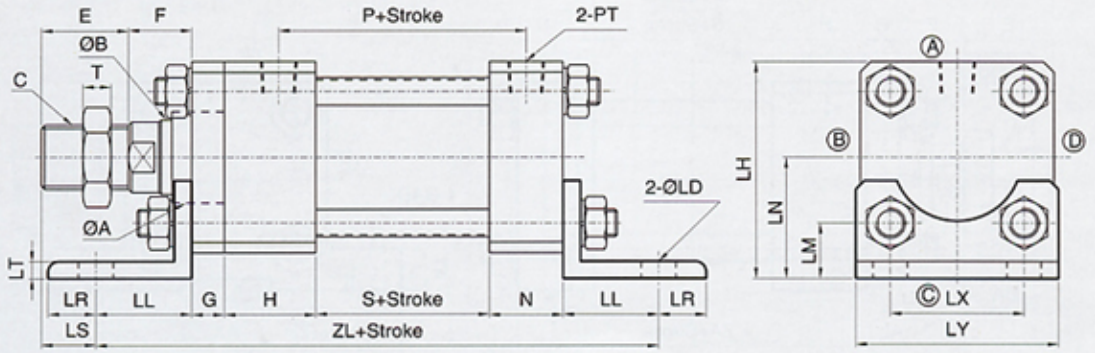

FOD FOD+LB TYPE

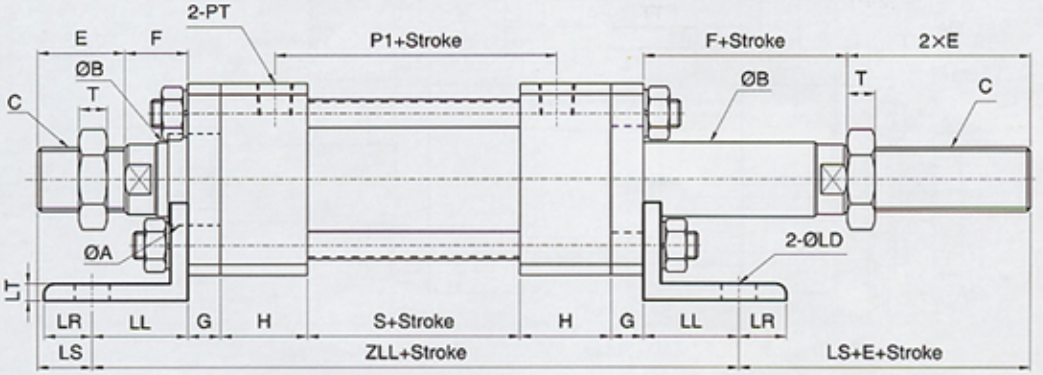

FOB-FOD TYPE																				LB TYPE						
BORE \ SIZE	ØA	ØB	C	E	F	G	H	N	LH	LN	LS	P	P1	PM	PT	S	T	ZL	ZLL	ØLD	LL	LM	LR	LT	LX	LY
Ø40	35	20	M18XP1.5	30	25	11	36	26	75.5	43	23	88	90	40	1/4	60	8	197	218	11	32	20.5	13	8	45	65
Ø50	40	25	M22XP1.5	35	25	13	42	34	87.5	50	25	92	90	40	3/8	60	13	219	240	11	35	24	15	8	50	75
Ø63	45	30	M26XP1.5	40	30	15	42	34	105	60	28	97	95	45	3/8	65	13	240	263	14	42	28.5	18	10	58	90
Ø80	55	40	M36XP1.5	45	30	18	46	40	127	72	25	105	105	45	1/2	65	15	269	293	18	50	32	20	12	78	110
Ø100	65	50	M45XP2.0	50	40	20	50	40	127	85	35	114	114	50	1/2	74	15	294	324	18	55	34	23	12	96	135

備註：

1.本系列軸心加大或縮小時如未註明長度尺寸時,依照本公司規定自行加工。
2.FO 系列行程未超過 1500mm時,活塞(PM)長度如附表,訂製行程如超過 1500mm時,活塞長度請參閱特性資料表。
3.本系列行程若超過2000mm(含)時,須加拉桿中間固定座。
4.本系列軸心螺帽規格M50mm(含)以上時,其外徑為圓形。

1.The length and size of the axis were not specifide when being enlarged or reduced. The size of the axis will be constructed according to the specification tablet.
2.When this series of stroke exceeds(includes) 1500mm, as see the property information for the length of the piston. Within 1500mm see the (PM) length of piston.
3.When this series of stroke exceeds(includes) 2000mm,the fixed base of the pull rod must be added in the middle.
4.The screw mut specification of this series of axis over M50 is round and W stands for its external diameter.

ASHUN

方型重油油壓缸TC尺寸圖
14Mpa Hydraulic Cylinders TC Dimensional Features

FOB FOB+TC TYPE

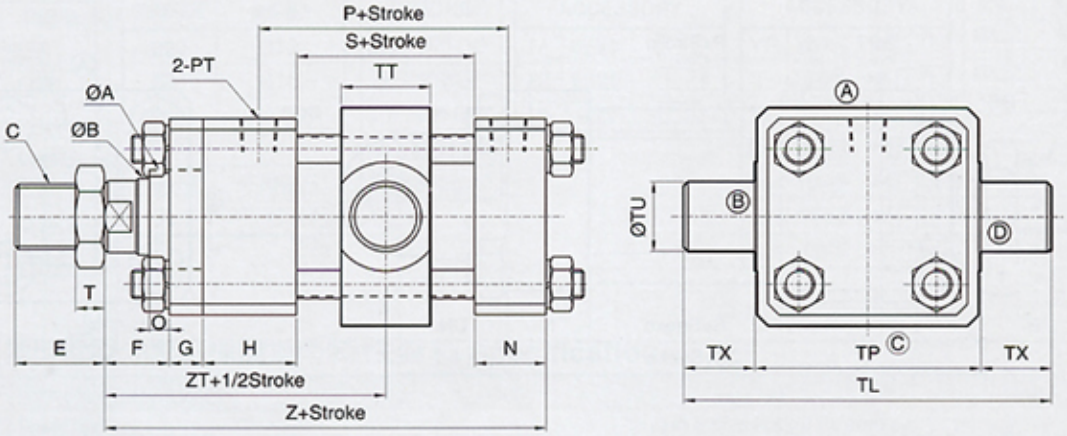

FOD FOD+TC TYPE

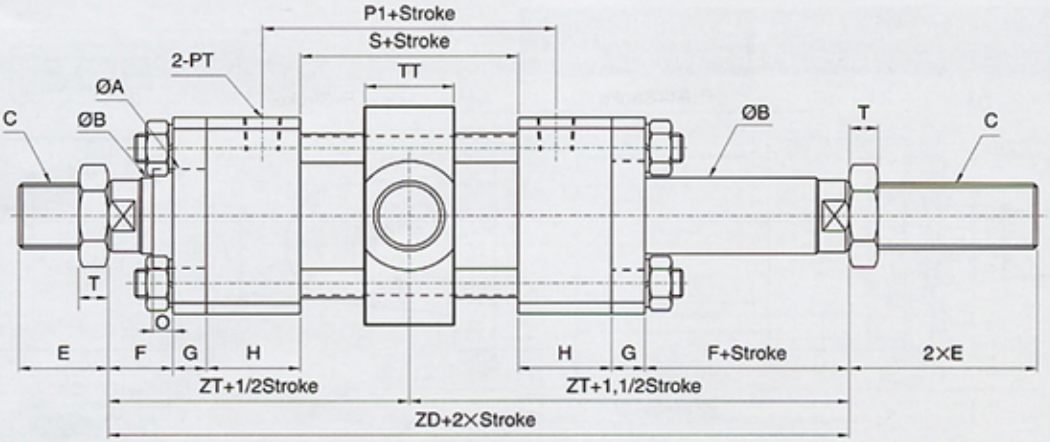

FOB-FOD TYPE																			TC TYPE				
BORE \ SIZE	ØA	ØB	C	E	F	G	H	O	N	P	P1	PM	PT	S	T	Z	ZD	ZT	ØTU	TL	TP	TT	TX
Ø40	35	20	M18XP1.5	30	25	11	36	11	26	88	90	40	1/4	60	8	158	204	102	20	109	69	25	20
Ø50	40	25	M22XP1.5	35	25	13	42	9	34	92	90	40	3/8	60	13	174	220	110	25	135	85	33	25
Ø63	45	30	M26XP1.5	40	30	15	42	9	34	97	95	45	3/8	65	13	186	239	119.5	30	160	100	40	30
Ø80	55	40	M36XP1.5	45	30	18	46	7	40	105	105	45	1/2	65	15	199	253	126.5	30	180	120	40	30
Ø100	65	50	M45XP2.0	50	40	20	50	7	40	114	114	50	1/2	74	15	224	294	147	40	225	145	50	40

備註：

1.本系列軸心加大或縮小時如未註明長度尺寸時,依照本公司規定自行加工。
2.F0 行程未超過 1500mm時,活塞(PM)長度如附表,訂製行程如超過 1500mm時,活塞長度請參閱特性資料表。
3.本系列軸心螺帽規格M50mm(含)以上時,其外徑為圓形。

1.The length and size of the axis were not specifide when being enlarged or reduced. The size of the axis will be constructed according to the specification tablet.
2.When this series of stroke exceeds(includes) 1500mm, as see the property information for the length of the piston. Within 1500mm see the (PM) length of piston.
3.The screw mut specification of this series of axis over M50 is round and W stands for its external diameter.

Series
FO-CA,CB

方型重油油壓缸CA,CB尺寸圖
14Mpa Hydraulic Cylinders Dimensional Features

FOB FOB+CA TYPE

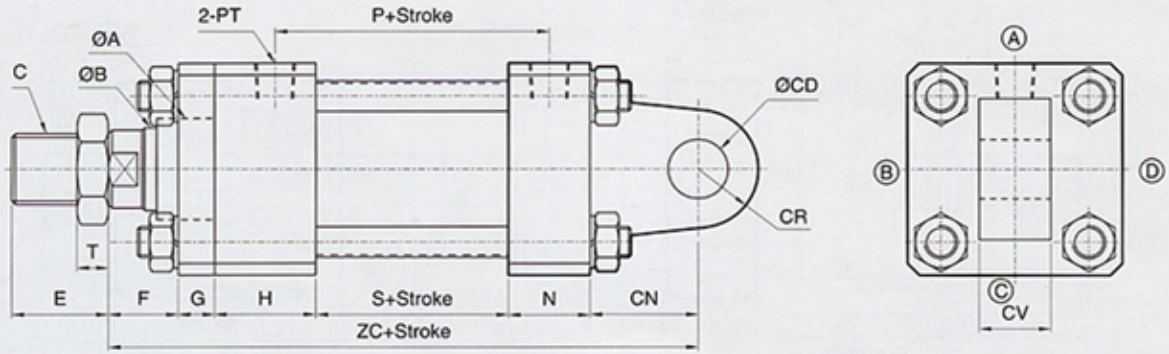

FOB FOB+CB TYPE

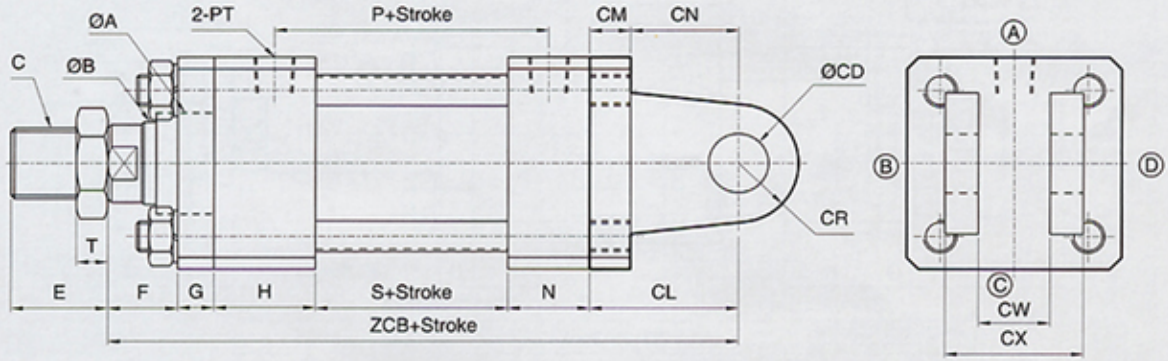

FOB TYPE																	CA-CB TYPE							
BORE \ SIZE	ØA	ØB	C	E	F	G	H	O	N	P	PM	PT	S	T	ZC	ZCB	ØCD	CL	CM	CN	CR	CV	CW	CX
Ø40	35	20	M18XP1.5	30	25	11	36	11	26	88	40	1/4	60	8	183	194	16	36	11	25	15	18	19	43
Ø50	40	25	M22XP1.5	35	25	13	42	9	34	92	40	3/8	60	13	209	222	20	48	13	35	20	20	21	45
Ø63	45	30	M26XP1.5	40	30	15	42	9	34	97	45	3/8	65	13	226	241	25	55	15	40	25	25	26	54
Ø80	55	40	M36XP1.5	45	30	18	46	7	40	105	45	1/2	65	15	239	257	30	58	18	40	30	30	31	71
Ø100	65	50	M45XP2.0	50	40	20	50	7	40	114	50	1/2	74	15	274	294	35	70	20	50	35	40	41	81

備註：

1.本系列軸心加大或縮小時如未註明長度尺寸時,依照本公司規定自行加工。
2.FO 行程未超過 1500mm時,活塞(PM)長度如附表,訂製行程如超過1500mm時,活塞長度請參閱特性資料表。
3.本系列CA型行程若超過2000mm(含)時,須加拉桿中間固定座。
4.本系列軸心螺帽規格M50mm(含)以上時,其外徑為圓形。

1.The length and size of the axis were not specilide when being enlarged or reduced. The size of the axis will be constructed according to the specification tablet.
2.When this series of stroke exceeds(includes) 1500mm, as see the property information for the length of the piston. Within 1500mm see the (PM) length of piston.
3.When this series of stroke exceeds(includes) 2000mm,the fixed base of the pull rod must be added in the middle.
4.The screw mut specification of this series of axis over M50 is round and W stands for its external diameter.

SO- 小型圓型低壓油壓缸系列(7Mpa) Hydraulic Cylinders Series ..... P. 79

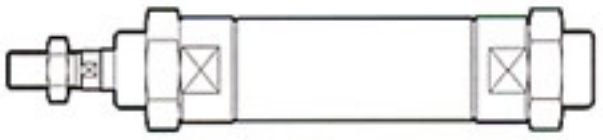

SOB SO+B(標準型)TYPE
SOD SO+D (雙軸型) TYPE
SOD SOD+AST (雙軸型附可調帽) TYPE ..... P. 80

SOB SOB+FA TYPE
SOD SOD+FA TYPE ..... P. 81

SOB SOB+FB TYPE
SOD SOD+FB TYPE ..... P. 82

SOB SOB+LB TYPE
SOD SOD+LB TYPE ..... P. 83

SOA SO+A (後蓋切平) TYPE
SOC SOC TYPE ..... P. 84

ASHUN

小型圓型低壓油壓缸採購指南 7Mpa Hydraulic Cylinders How to order

SOB R 30 * Ø16 * 80ST LB + Y + Es2

型 式 TYPE	
SOA	平尾型
SOB	LB型
SOC	CA型
SOD	雙軸型

缸內徑 CYLINDER BORE	軸心 ROD 標準-最大
Ø20	Ø12
Ø30	Ø16
Ø40	Ø20-Ø25

無記號	不附磁石
R	內附磁石

行 程 STROKE	
鋼管	Ø20-Ø40
最大衝程3米	
鋁管	Ø20-Ø40
最大衝程1.9米	
鋁管耐壓20kg/cm²	

缸體固定型式 ACCESSORY	
FA	前法蘭型
FB	後法蘭型
LB	腳座型

軸心固定型式 ACCESSORY	
YP	Y附PIN
I	I型接頭
KG	浮動接頭
PHS	魚眼接頭
T	T型接頭
H	焊套接頭
A	可調螺帽

磁簧開關	
記號	數量
無記號	無
Es1	1個
Es2	2個

小型圓型低壓油壓缸採購指南特性資料 Specification

油壓缸內徑 Bore sizes of cylinder(mm)	Ø20	Ø30	Ø40
工作媒介 Power fluid	以濾清之標準液壓油 Filtered oil		
缸管材質 Material of cylinder bareel	碳鋼管 Carbon steel STKM-13C/鋁合金管 Aluminium extrusion,Anodised 20 microns		
使用壓力範圍 The range of pressure(MPa)	0.3-7.0MPa(3-70kg/cm²)		
使用溫度範圍 The range of temperature(°c)	-10°~+60°(°C)		
使用速度範圍 The range of speed(mm/sec)	8~300(mm/sec)		

小型圓型低壓油壓缸採購指南結構圖 Inside Structure and Parts List

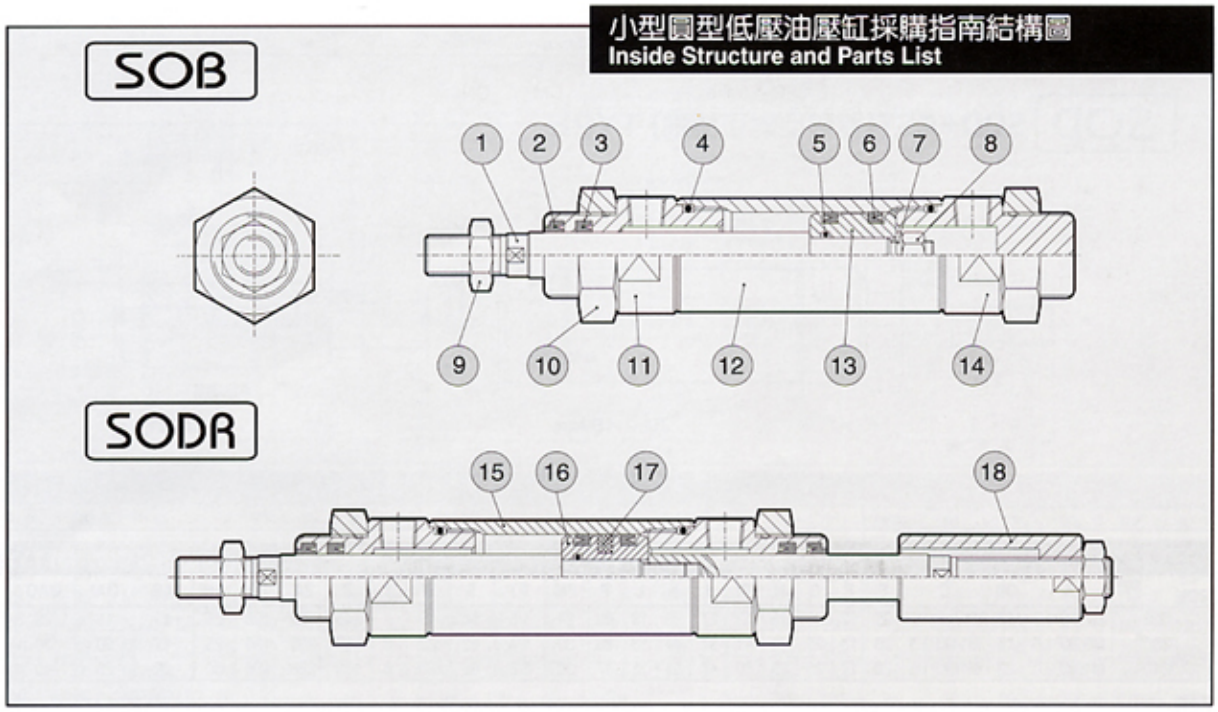

NO	零件名	Part mane	數量 Quantity	NO	零件名	Part mane	數量 Quantity	NO	零件名	Part mane	數量 Quantity
1	活塞桿	Piston rod	1	7	彈簧華司	Spring washer	1	13	活塞本體	Piston	1
2	刮油環	Dust wiper	1	8	螺帽	Nut	1	14	後蓋	End cover	1
3	軸用油封	Rod packiog	1	9	螺帽	Nut	1	15	油缸本體	Cylinder tube	1
4	O型環	Gasket	1	10	螺帽	Nut	2	16	活塞本體	Piston	1
5	O型環	Gasket	1	11	前蓋	Rod cover	1	17	磁石	Magnet	1
6	橡膠活塞環	Piston packing	2	12	缸管本體	Cylinder tube	1	18	可調螺帽	Adjustble nut	1

Series
SOB,SOD

小型圓型低壓油壓缸標準尺寸圖
7Mpa SO Series Dimensional Features

SOB SO+B(標準型) TYPE

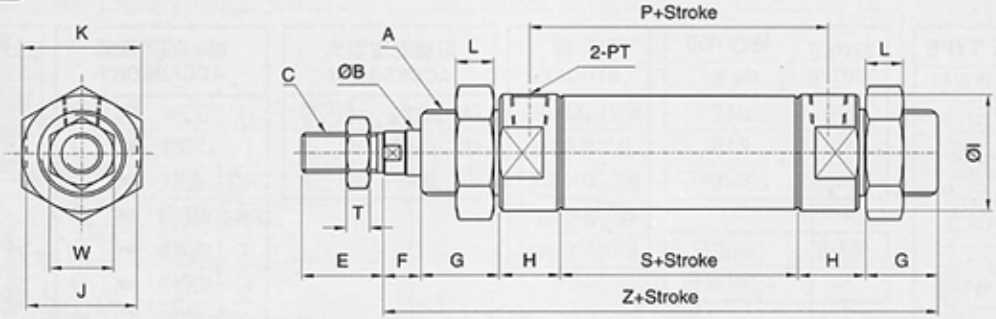

SOD SO+D(雙軸型) TYPE

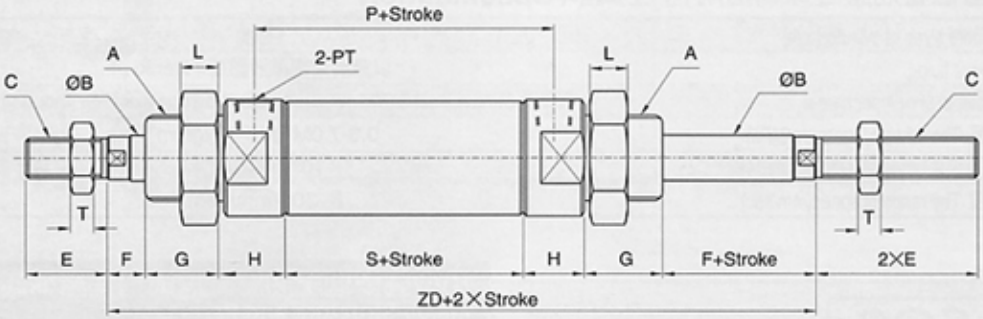

SOD SOD+AST(雙軸型附可調帽) TYPE

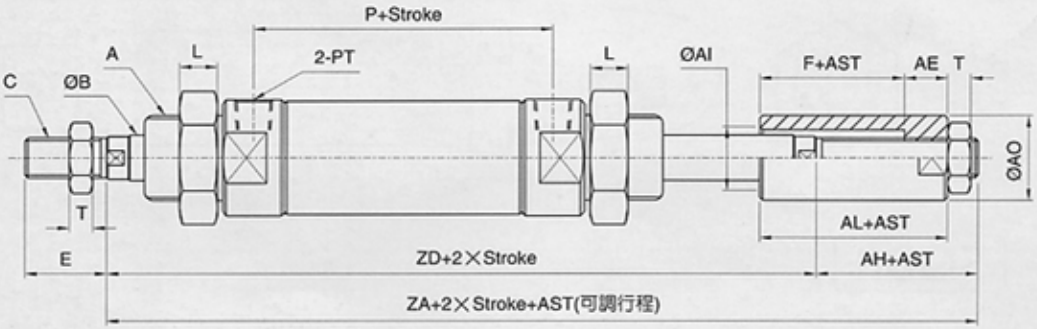

SOB-SOD TYPE																						A(可調螺帽) TYPE			
BORE \ SIZE	A	ØB	C	E	F	G	H	ØI	J	K	L	P	PM	PT	S	W	T	Z	ZA	ZD	AH	AE	ØAI	ØAO	AL
Ø20	M26XP1.5	12	M10XP1.25	25	12	25	15	32	27	35	13	69	24	1/8	54	16	8	146	183	158	25	15	16	25	27
Ø30	M30XP1.5	16	M14XP1.5	28	13	25	21	41	37	41	13	83	30	1/4	62	22	8	167	205	180	25	15	20	30	28
Ø40	M40XP2.0	20	M16XP1.5	28	17	25	25	50	47	55	15	87	30	3/8	62	23.5	8	179	226	196	30	20	25	40	37

備註：

1.軸心加大或縮小時如未註明長度尺寸時,依照本公司規定自行加工。
2.SO40系列行程超過 500mm以上時,軸心牙加大為M18*P1.5。
3.本系列行程超過1500mm時,活塞長度(PM)為加倍長
(P,Z,ZA,ZD須再加乙次PM尺寸)。
4.AST為客戶指定之可調行程。

1.The length and size of axis were not specifide to constructed must be according to our company design's modify without prior notice.
2.The series stroke exceed 500mm (includes), axletree broaden be M18xP1.5.
3.The series stroke exceed (includes) 1500mm, should redouble length (PM) of piston. (Add twice length PM of size:P,Z,ZA,ZD).
4.AST:Adjustable stroke by customer assigment.

ASHUN

小型圓型低壓油壓缸FA板尺寸圖
7Mpa SO Series FA Dimensional Features

SOB SOB+FA TYPE

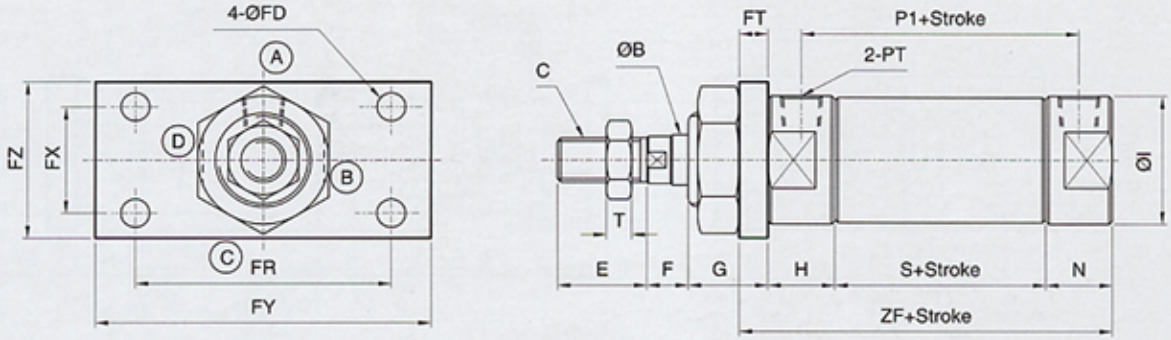

SOD SOD+FA TYPE

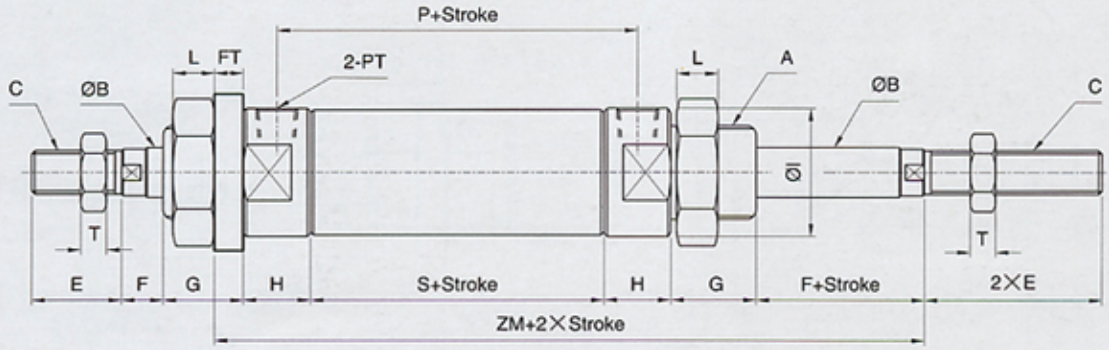

SOB-SOD TYPE																			FA TYPE					
BORE \ SIZE	A	ØB	C	E	F	G	H	ØI	L	N	P	P1	PM	PT	S	T	ZF	ZM	ØFD	FT	FR	FX	FY	FZ
Ø20	M26XP1.5	12	M10XP1.25	25	12	25	15	32	13	18	70.5	69	24	1/8	54	8	96	130	9	9	56	30	80	45
Ø30	M30XP1.5	16	M14XP1.5	28	13	25	21	41	13	24	84.5	83	30	1/4	62	8	116	151	9	9	80	34	105	50
Ø40	M40XP2.0	20	M16XP1.5	28	17	25	25	50	15	25	89.5	87	30	3/8	62	8	123	165	12	11	93	50	115	72

備註：

1.軸心加大或縮小時如未註明長度尺寸時,依照本公司規定自行加工。
2.SO40系列行程超過 500mm以上時,軸心牙加大為M18*P1.5。
3.本系列行程超過1500mm時,活塞長度(PM)為加倍長
(P,ZF,ZM須再加乙次PM尺寸)。

1.The length and size of axis were not specifide to constructed must be according to our company design's modify without prior notice.
2.The series stroke exceed 500mm (includes), axletree broaden be M18xP1.5.
3.The series stroke exceed (includes) 1500mm, should redouble length (PM) of piston. (Add twice length PM of size:P,ZF,ZM).

Series SO-FB

小型圓型低壓油壓缸FB板尺寸圖
7Mpa SO Series FB Dimensional Features

SOB SOB+FB TYPE

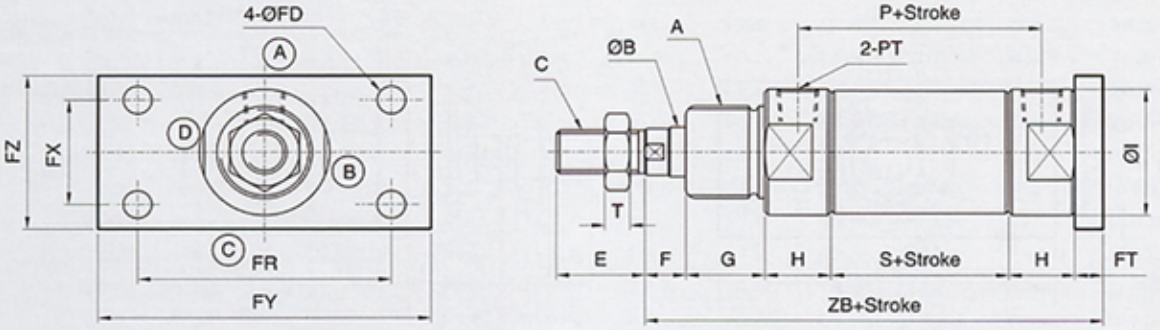

SOD SOD+FB TYPE

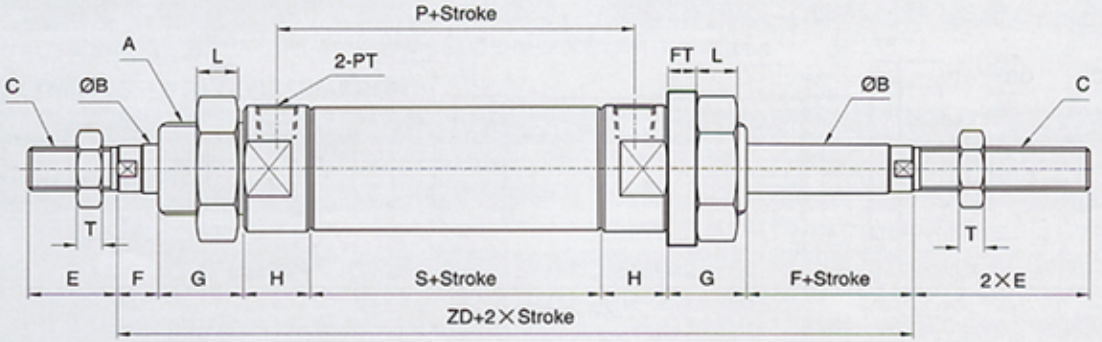

SOB-SOD TYPE																	FB TYPE					
BORE \ SIZE	A	ØB	C	E	F	G	H	ØI	L	P	PM	PT	S	T	ZB	ZD	ØFD	FT	FR	FX	FY	FZ
Ø20	M26XP1.5	12	M10XP1.25	25	12	25	15	32	13	69	24	1/8	54	8	130	158	9	9	56	30	80	45
Ø30	M30XP1.5	16	M14XP1.5	28	13	25	21	41	13	83	30	1/4	62	8	151	180	9	9	80	34	105	50
Ø40	M40XP2.0	20	M16XP1.5	28	17	25	25	50	15	87	30	3/8	62	8	165	196	12	11	93	50	115	72

備註：

1.軸心加大或縮小時如未註明長度尺寸時,依照本公司規定自行加工。
2.SO40系列行程超過 500mm以上時,軸心牙加大為M18*P1.5。
3.本系列行程超過1500mm時,活塞長度(PM)為加倍長
(P,ZB,ZD須再加乙次PM尺寸)。

1.The length and size of axis were not specifide to constructed must be according to our company design's modify without prior notice.
2.The series stroke exceed 500mm (includes), axletree broaden be M18xP1.5.
3.The series stroke exceed (includes) 1500mm, should redouble length (PM) of piston. (Add twice length PM of size:P,ZB,ZD).

ASHUN

小型圓型低壓油壓缸LB架尺寸圖
7Mpa SO Series LB Dimensional Features

SOB SOB+LB TYPE

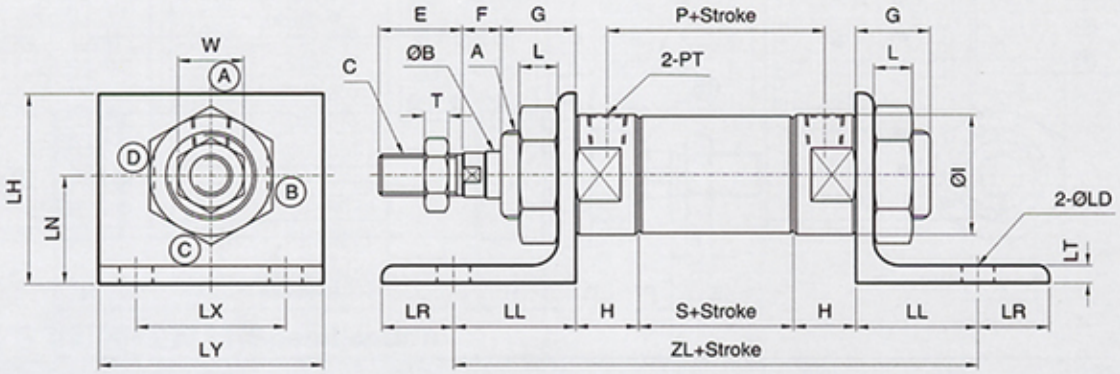

SOD SOD+LB TYPE

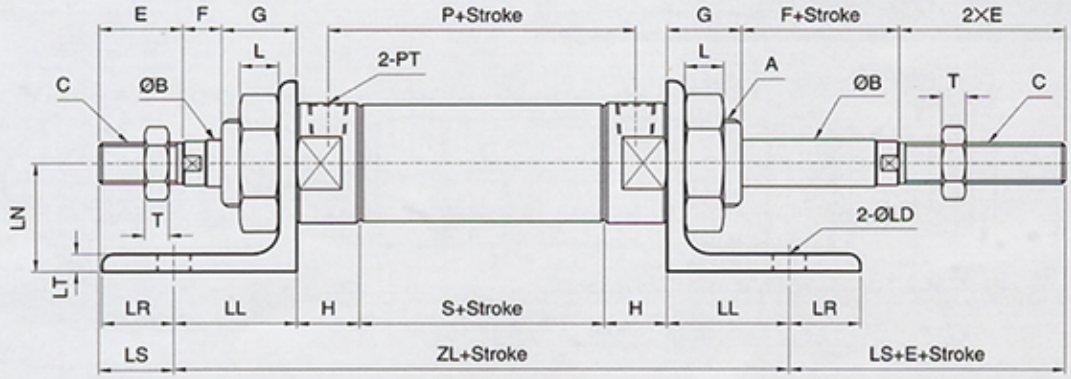

SOB-SOD TYPE																		LB TYPE							
BORE \ SIZE	A	ØB	C	E	F	G	H	ØI	L	LS	P	PM	PT	S	W	T	ZL	ØLD	LH	LN	LL	LR	LT	LX	LY
Ø20	M26XP1.5	12	M10XP1.25	25	12	25	15	32	13	42.5	69	24	1/8	54	16	8	123	7	55	35	19.5	10.5	4.5	40	55
Ø30	M30XP1.5	16	M14XP1.5	28	13	25	21	41	13	25	83	30	1/4	62	22	8	186	10	65	37	41	24	6	50	75
Ø40	M40XP2.0	20	M16XP1.5	28	17	25	25	50	15	25	87	30	3/8	62	23.5	8	202	12	75	47	45	30	9	60	88

備註：

1.軸心加大或縮小時如未註明長度尺寸時,依照本公司規定自行加工。
2.SO40系列行程超過 500mm以上時,軸心牙加大為M18*P1.5。
3.本系列行程未超過1500mm時.活塞長度(PM)為加倍長
(P,ZL須再加乙次PM尺寸)。

1.The length and size of axis were not specifide to constructed must be according to our company design's modify without prior notice.
2.The series stroke exceed 500mm (includes), axletree broaden be M18xP1.5.
3.The series stroke within (includes) 1500mm, should redouble length (PM) of piston. (Add twice length PM of size:P,ZL).

Series
SO-A,CA

小型圓型低壓油壓缸後平CA尺寸圖
7Mpa SO Series A,CA Dimensional Features

SOA SO+A(後蓋切平) TYPE

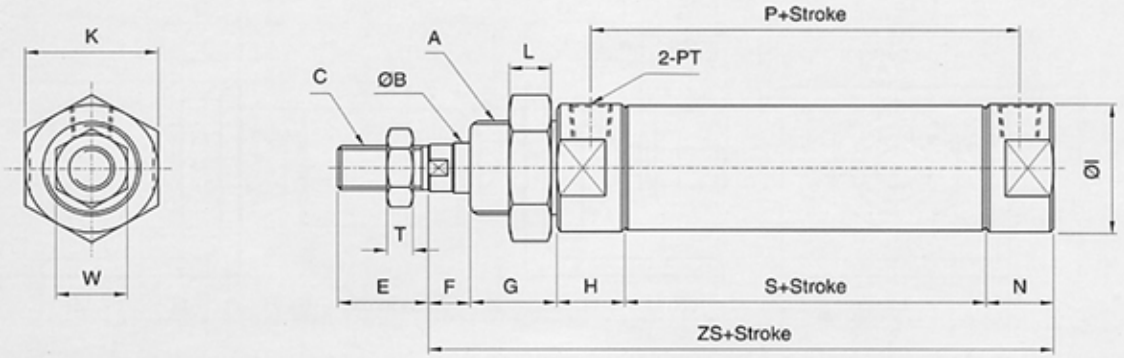

SOC SOC TYPE

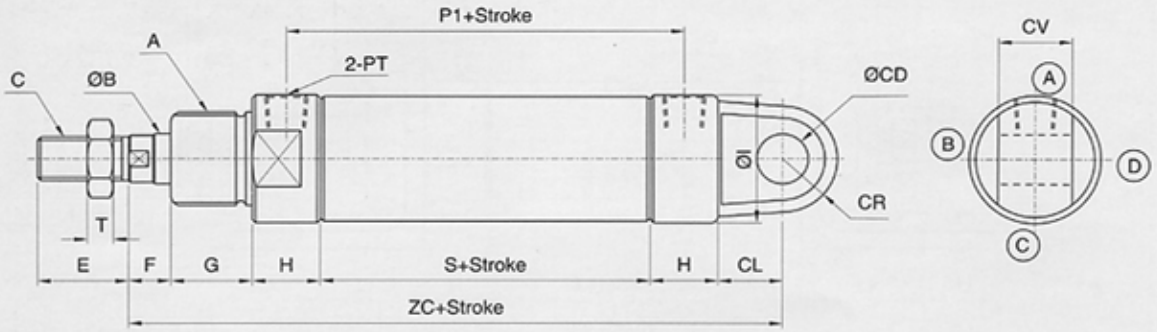

SOA-SOC TYPE																					CA TYPE			
BORE \ SIZE	A	ØB	C	E	F	G	H	ØI	K	L	N	P	P1	PM	PT	S	W	T	ZS	ZC	ØCD	CL	CR	CV
Ø20	M26XP1.5	12	M10XP1.25	25	12	25	15	32	35	13	18	70.5	69	24	1/8	54	16	8	124	136	10	15	10	15
Ø30	M30XP1.5	16	M14XP1.5	28	13	25	21	41	41	13	24	84.5	83	30	1/4	62	22	8	145	162	16	20	17	23
Ø40	M40XP2.0	20	M16XP1.5	28	17	25	25	50	55	15	25	89.5	87	30	3/8	62	23.5	8	154	179	16	25	18	25

備註：

1.軸心加大或縮小時如未註明長度尺寸時,依照本公司規定自行加工。
2.SO40系列行程超過 500mm以上時,軸心牙加大為M18*P1.5。
3.SO系列行程未超過1500mm時,活塞長度(PM)為加倍長(P,P1,ZS,ZC須再加一次PM尺寸)。

1.The length and size of axis were not specifide to constructed must be according to our company design's modify without prior notice.
2.The series stroke exceed 500mm (includes), axletree broaden be M18xP1.5.
3.The series stroke exceed (includes) 1500mm, should redouble length (PM) of piston. (Add twice length PM of size:P, P1, ZS, ZC).

RO- 圓型油壓缸系列(14Mpa) Hydraulic Cylinders Series

P. 85

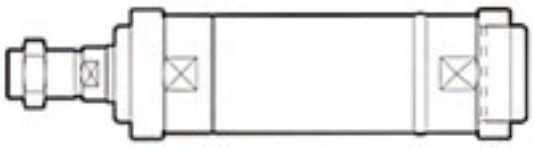

ROB RO+B(後蓋焊接式)TYPE　ROD RO+D (雙軸型) TYPE
ROD ROD+AST (雙軸型附可調墊) TYPE ..... P. 86

ROA ROA(後平)+FA TYPE　ROD ROD+FA TYPE ..... P. 87

ROB ROB+FB TYPE　ROD ROD+FB TYPE ..... P. 88

ROB ROB+LB (架) TYPE　ROD ROD+LB TYPE ..... P. 89

ROA ROA+TC TYPE　ROD ROD+TC TYPE ..... P. 90

ROC ROC TYPE　ROCB ROCB TYPE ..... P. 91

RO□

圓型油壓缸採購指南 14Mpa Hydraulic Cylinders How to order

ROB | R | 63 * Ø35 * 100ST | LB + Y + Es2

型 式 TYPE	
ROA	平尾型
ROB	LB型
ROC	CA型
ROD	雙軸型

缸內徑 CYLINDER BORE	軸心ROD 標準-最大
Ø40	Ø20-Ø25
Ø50	Ø25-Ø30
Ø63	Ø35-Ø40
Ø80	Ø40-Ø50
Ø100	Ø50-Ø70
Ø125	Ø60-Ø80

無記號	不附磁石
R	內附磁石
本系列適用Ø40-Ø100	

行 程 STROKE	
鋼管	Ø40-Ø200
最大衝程4米	
白鐵管	Ø40-Ø100
最大衝程2.8米	

缸體固定型式 ACCESSORY	
FA	前法蘭型
FB	後法蘭型
LB	腳座型
TC	耳軸型

軸心固定型式 ACCESSORY	
YP	Y附PIN
I	I型接頭
KG	浮動接頭
PHS	魚眼接頭
T	T型接頭
H	焊套接頭
A	可調螺帽

磁簧開關	
記號	數量
無記號	無
Es1	1個
Es2	2個

圓型油壓缸特性資料 Specification

油壓缸內徑 Bore sizes of cylinder(mm)	Ø40	Ø50	Ø63	Ø80	Ø100	Ø125
工作媒介 Power fluid	以濾清之標準液壓油 Filtered oil					
缸管材質 Material of cylinder bareel	碳鋼管 Carbon steel STKM-13C/白鐵管 Stainless tubes SUS 304					
使用壓力範圍 The range of pressure(MPa)	0.3-14MPa(3-140kg/cm²)					
使用溫度範圍 The range of temperature(°C)	-10°~+60°(C°)					
使用速度範圍 The range of speed(mm/sec)	8~300(mm/sec)					
行程於1500~2500mm時,活塞(PM)長度	60	70	70	100	100	120
行程於2501~4000mm時,活塞(PM)長度	90	100	100	150	180	200

圓型油壓缸結構圖 Inside Structure and Parts List

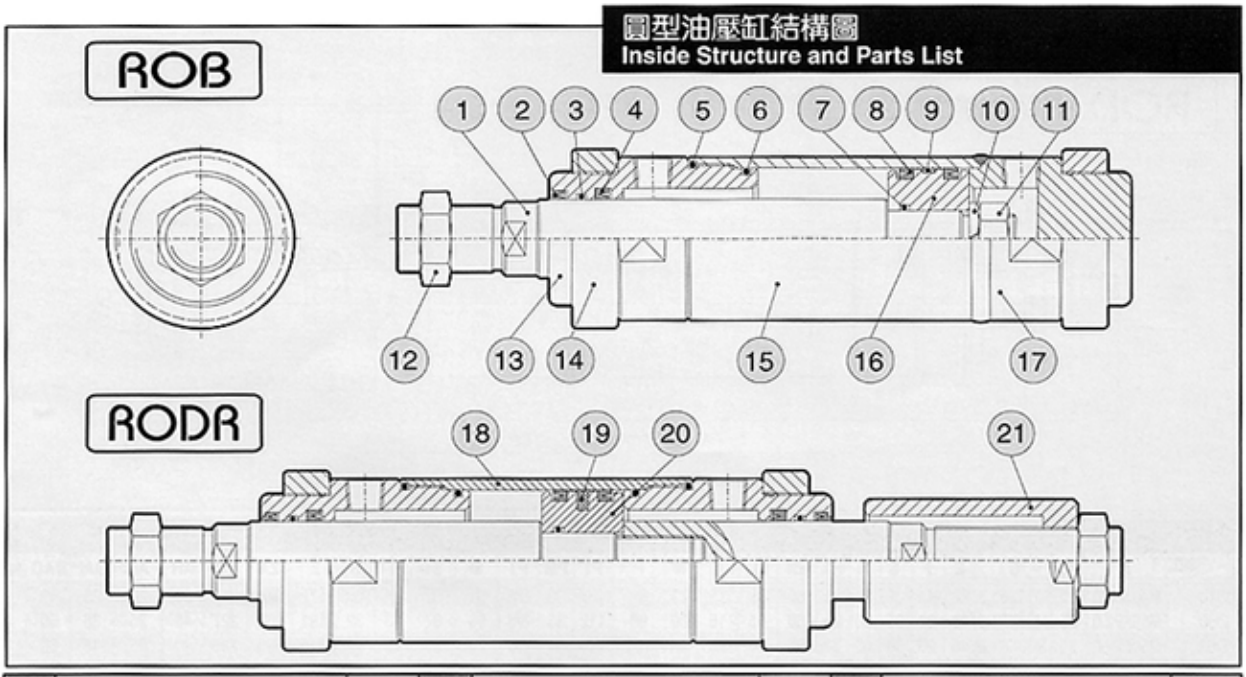

NO	零件名	Part mane	數量 Quantity	NO	零件名	Part mane	數量 Quantity	NO	零件名	Part mane	數量 Quantity
1	活塞桿	Piston rod	1	8	PU活塞環	Piston packing	2	15	缸管本體	Cylinder tube	1
2	刮油環	Dust wiper	1	9	耐磨環	Wearing ring	1	16	活塞本體	Piston	1
3	O型環	Gasket	1	10	彈簧華司	Spring washer	1	17	後蓋	End cover	1
4	軸用油封	Rod packiog	1	11	螺帽	Nut	1	18	缸管本體	Cylinder tube	1
5	O型環	Gasket	1	12	軸心螺帽	Rod nut	1	19	磁石	Magnet	1
6	O型環	Gasket	1	13	前蓋	Rod cover	1	20	活塞本體	Piston	1
7	O型環	Gasket	1	14	前蓋螺帽	Cover nut	1	21	可調螺帽	Adjustble nut	1

圓型中型油壓缸尺寸圖
14Mpa RO Series Dimensional Features

ROB RO+B(後蓋焊接式) TYPE

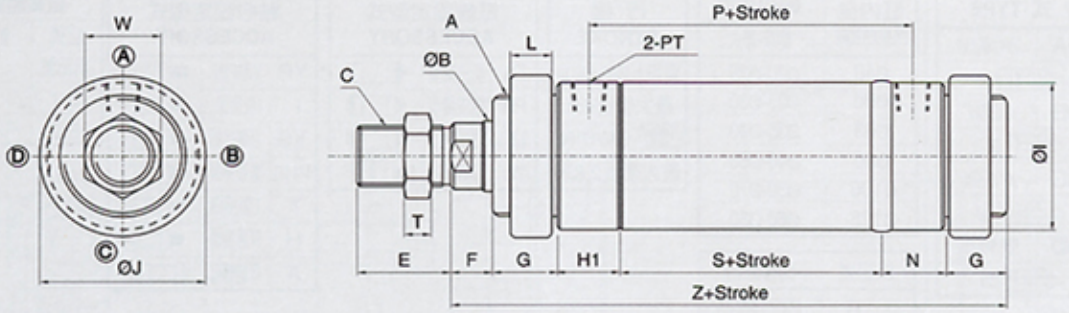

ROD RO+D(雙軸型) TYPE

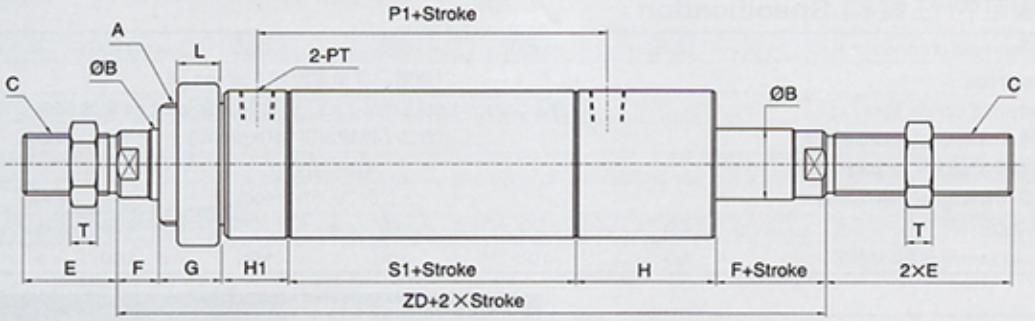

ROD ROD+AST(雙軸型附可調帽) TYPE

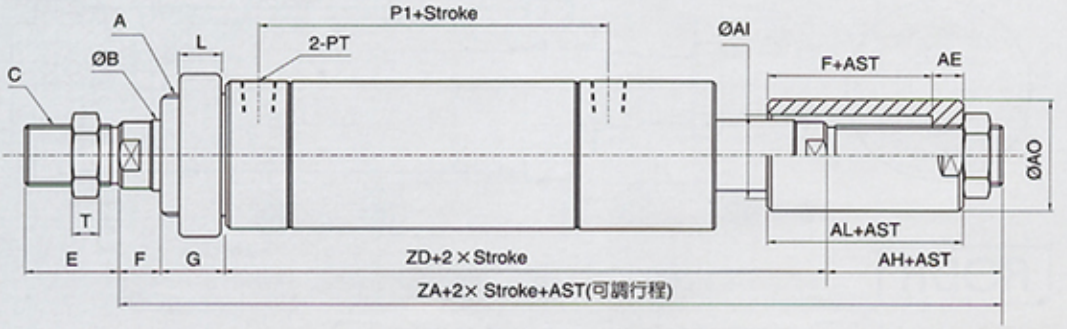

ROB-ROD TYPE																									A(可調帽) TYPE			
BORE \ SIZE	A	ØB	C	E	F	G	H	H1	ØI	J	L	N	P	P1	PM	PT	S	S1	T	W	Z	ZA	ZD	AH	AE	ØAI	ØAO	AL
Ø40	M40XP2.0	20	M16XP1.5	28	17	25	50	25	50	55	15	25	86	107	30	3/8	61	82	8	23.5	178	246	216	30	20	25	40	37
Ø50	M50XP2.0	25	M22XP1.5	40	20	25	50	25	60	65	15	30	96	112	35	3/8	66	87	13	32	191	267	227	40	25	35	50	45
Ø63	M60XP2.0	35	M30XP1.5	45	20	30	60	30	73	80	20	35	105	125	35	3/8	70	95	13	41	215	295	255	40	25	45	60	45
Ø80	M70XP2.0	40	M30XP1.5	45	20	30	60	30	95	90	20	40	127.5	150	50	1/2	90	120	13	41	240	325	280	45	30	50	70	50
Ø100	M90XP2.0	50	M40XP2.0	55	25	30	60	30	114	110	20	40	147.5	180	60	1/2	110	150	15	55	265	365	320	45	30	60	90	55
Ø125	M120XP2.0	60	M50XP2.0	70	30	30	70	40	140	150	20	50	172.5	210	70	3/4	125	170	15	65	305	420	370	50	35	70	100	65

備註：

1.軸心加大或縮小時如未註明長度尺寸時,依照本公司規定自行加工。
2.RO40系列行程超過 500mm以上時,軸心牙加大為M18*P1.5。
3.RO系列行程未超過 1499mm時,活塞(PM)長度依據規格表組裝,行程如超過1500mm以上時,活塞長度(PM)請參閱特性資料表。
4.前蓋螺帽(ØJ)與軸心螺帽(ØW)規格大於M50時,其外徑為圓型,W,J指其外徑。
5.AST為客戶指定之可調行程。

1.The length and size of axis were not specifide to constructed must be according to our company design's modify without prior notice.
2.The series stroke exceed 500mm (includes), axletree broaden be M18xP1.5.
3.When this series of stroke exceeds(includes) 1500mm, as see the property information for the length of the piston. Within 1499mm see the (PM) length of piston.
4.External diameter is round (W, J),when rod cover(ØJ) and rod nut (ØW) exceed M50.
5.AST:Adjustable stroke by customer assigment.

圓型中型油壓缸FA板尺寸圖
14Mpa RO Series FA Dimensional Features

ROA ROA(後平)+FA TYPE(後蓋焊接式)

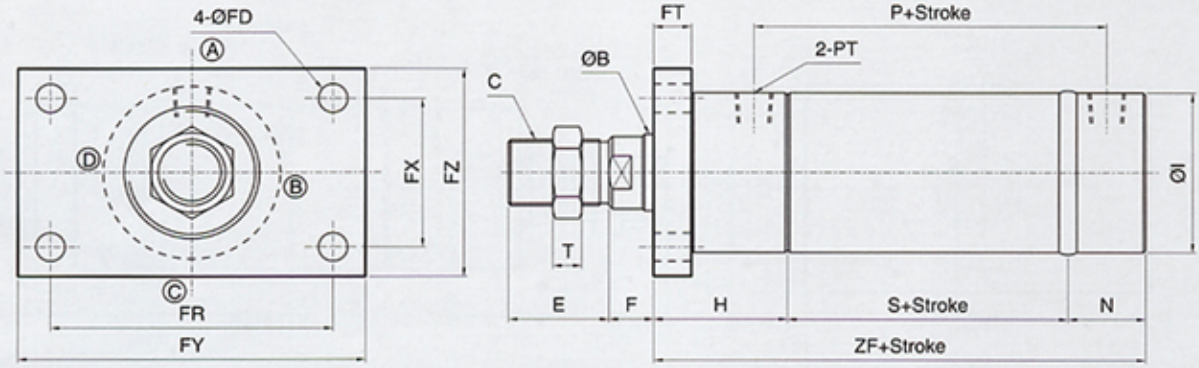

ROD ROD+FA TYPE

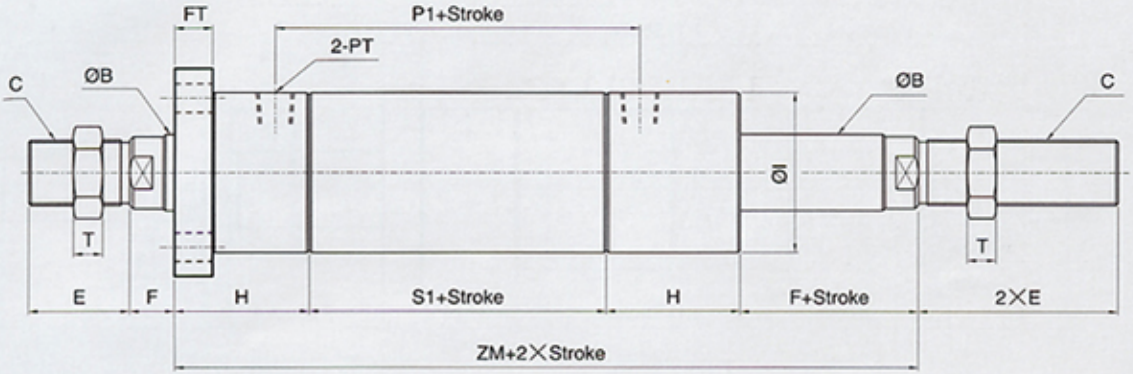

ROB-ROD TYPE																	FA TYPE					
BORE \ SIZE	ØB	C	E	F	H	ØI	N	P	P1	PM	PT	S	S1	T	ZF	ZM	ØFD	FT	FR	FX	FY	FZ
Ø40	20	M16XP1.5	28	17	50	50	25	86	107	30	3/8	61	82	8	136	199	12	11	93	50	115	72
Ø50	25	M22XP1.5	40	20	50	60	30	96	112	35	3/8	66	87	13	146	207	14	17	110	56	150	85
Ø63	35	M30XP1.5	45	20	60	73	35	105	125	35	3/8	70	95	13	165	235	14	17	126	68	155	95
Ø80	40	M30XP1.5	45	20	60	95	40	127.5	150	50	1/2	95	120	13	195	260	18	20	152	75	190	120
Ø100	50	M40XP2.0	55	25	60	114	40	147.5	180	60	1/2	110	150	15	210	295	20	20	180	100	220	140
Ø125	60	M50XP2.0	70	30	70	140	50	172.5	210	70	3/4	125	170	15	245	340	24	30	222	122	280	170

備註：

1.軸心加大或縮小時如未註明長度尺寸時,依照本公司規定自行加工。
2.RO40系列行程超過 500mm以上時,軸心牙加大為M18*P1.5。
3.RO系列行程未超過 1499mm時,活塞(PM)長度依據規格表組裝,行程如超過1500mm以上時,活塞長度(PM)請參閱特性資料表。
4.前蓋螺帽(ØJ)與軸心螺帽(ØW)規格大於M50時,其外徑為圓型,W,J指其外徑。

1.The length and size of axis were not specifide to constructed must be according to our company design's modify without prior notice.
2.The series stroke exceed 500mm (includes), axletree broaden be M18xP1.5.
3.When this series of stroke exceeds(includes) 1500mm, as see the property information for the length of the piston. Within 1499mm see the (PM) length of piston.
4.External diameter is round (W, J),when rod cover(ØJ) and rod nut (ØW) exceed M50.

圓型中型油壓缸FB板尺寸圖
14Mpa RO Series FB Dimensional Features

ROB ROB+FB TYPE

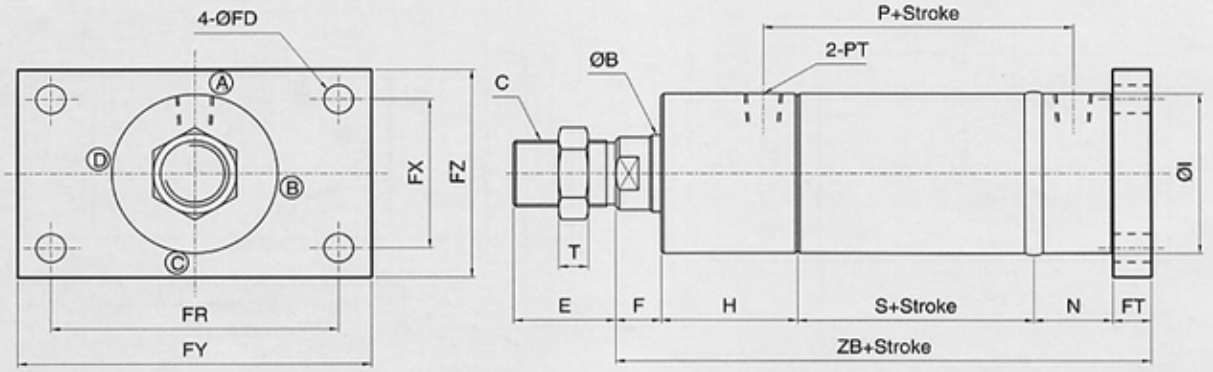

ROD ROD+FB TYPE

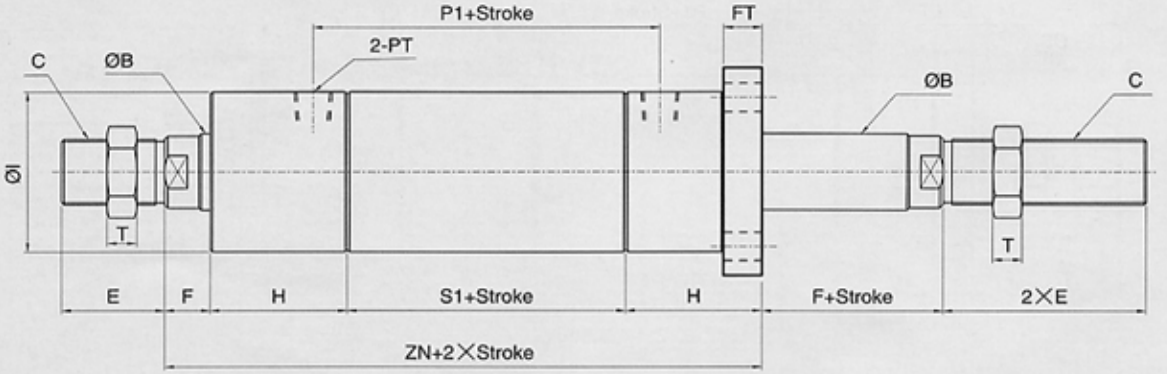

ROB-ROD TYPE																	FB TYPE					
BORE \ SIZE	ØB	C	E	F	H	ØI	N	P	P1	PM	PT	S	S1	T	ZB	ZN	ØFD	FT	FR	FX	FY	FZ
Ø40	20	M16XP1.5	28	17	50	50	25	86	107	30	3/8	61	82	8	164	199	12	11	93	50	115	72
Ø50	25	M22XP1.5	40	20	50	60	30	96	112	35	3/8	66	87	13	183	207	14	17	110	56	150	85
Ø63	35	M30XP1.5	45	20	60	73	35	105	125	35	3/8	70	95	13	202	235	14	17	126	68	155	95
Ø80	40	M30XP1.5	45	20	60	95	40	127.5	150	50	1/2	90	120	13	230	260	18	20	152	75	190	120
Ø100	50	M40XP2.0	55	25	60	114	40	147.5	180	60	1/2	110	150	15	255	295	20	20	180	100	220	140
Ø125	60	M50XP2.0	70	30	70	140	50	172.5	210	70	3/4	125	170	15	305	340	24	30	222	122	280	170

備註：

1.軸心加大或縮小時如未註明長度尺寸時,依照本公司規定自行加工。
2.RO40系列行程超過 500mm以上時,軸心牙加大為M18*P1.5。
3.RO系列行程未超過 1499mm時,活塞(PM)長度依據規格表組裝,行程如超過1500mm以上時,活塞長度(PM)請參閱特性資料表。
4.前蓋螺帽(ØJ)與軸心螺帽(ØW)規格大於M50時,其外徑為圓型,W,J指其外徑。

1.The length and size of axis were not specifide to constructed must be according to our company design's modify without prior notice.
2.The series stroke exceed 500mm (includes), axletree broaden be M18xP1.5.
3.When this series of stroke exceeds(includes) 1500mm, as see the property information for the length of the piston. Within 1499mm see the (PM) length of piston.
4.External diameter is round (W, J),when rod cover(ØJ) and rod nut (ØW) exceed M50.

ASHUN

圓型中型油壓缸LB架尺寸圖
14Mpa RO Series LB Dimensional Features

ROB ROB+LB (架) TYPE

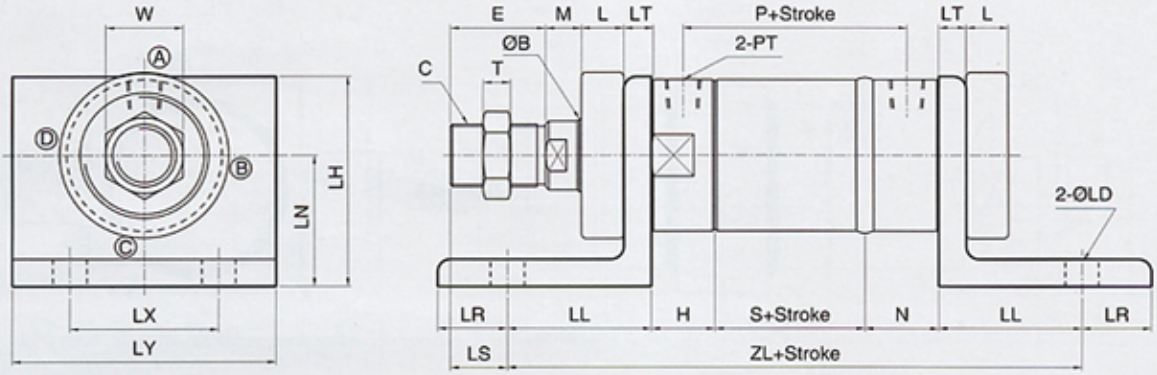

ROD ROD+LB TYPE

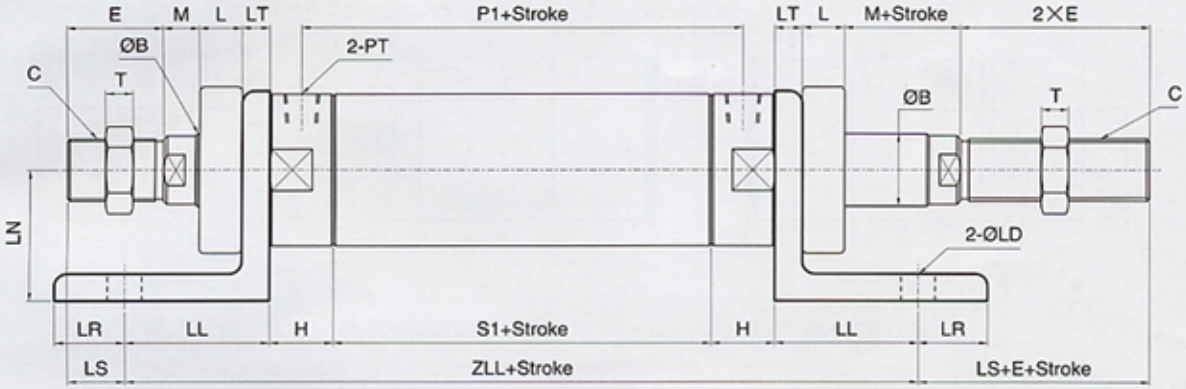

ROB-ROD TYPE																		LB TYPE							
BORE \ SIZE	ØB	C	E	M	H	N	L	LS	P	P1	PM	PT	S	S1	T	ZL	ZLL	ØLD	LH	LN	LL	LR	LT	LX	LY
Ø40	20	M16XP1.5	28	18	25	25	15	25	86	107	30	3/8	61	82	8	201	222	12	75	47	45	30	9	60	88
Ø50	25	M22XP1.5	40	18	25	30	15	30	96	112	35	3/8	66	87	13	231	247	14	88	57	55	33	9	70	100
Ø63	35	M30XP1.5	45	17	30	35	20	29	105	125	35	3/8	70	95	13	271	291	16	101	63	68	33	13	70	124
Ø80	40	M30XP1.5	45	17	30	40	20	29	127.5	150	50	1/2	90	120	13	296	316	18	101	60	68	33	13	80	140
Ø100	50	M40XP2.0	55	20	30	40	20	40	147.5	180	60	1/2	110	150	15	320	350	18	140	80	70	35	15	90	144
Ø125	60	M50XP2.0	70	25	40	50	20	60	172.5	210	70	3/4	125	170	15	375	410	22	190	110	80	40	20	120	160

備註：

1.軸心加大或縮小時如未註明長度尺寸時,依照本公司規定自行加工。
2.RO40系列行程超過 500mm以上時,軸心牙加大為M18*P1.5。
3.RO系列行程超過1499mm時,活塞(PM)長度依據規格表組裝,行程如超過1500mm以上時,活塞長度(PM)請參閱特性資料表。
4.前蓋螺帽(ØJ)與軸心螺帽(ØW)規格大於M50時,其外徑為圓型,W指其外徑。

1.The length and size of axis were not specifide to constructed must be according to our company design's modify without prior notice.
2.The series stroke exceed 500mm (includes), axletree broaden be M18xP1.5.
3.When this series of stroke exceeds(includes) 1499mm, as see the property information for the length of the piston. Within 1499mm see the (PM) length of piston.
4.External diameter is round (W),when rod cover(ØJ) and rod nut (ØW) exceed M50.

圓型中型油壓缸TC尺寸圖
14Mpa RO Series TC Dimensional Features

ROA ROA+TC TYPE

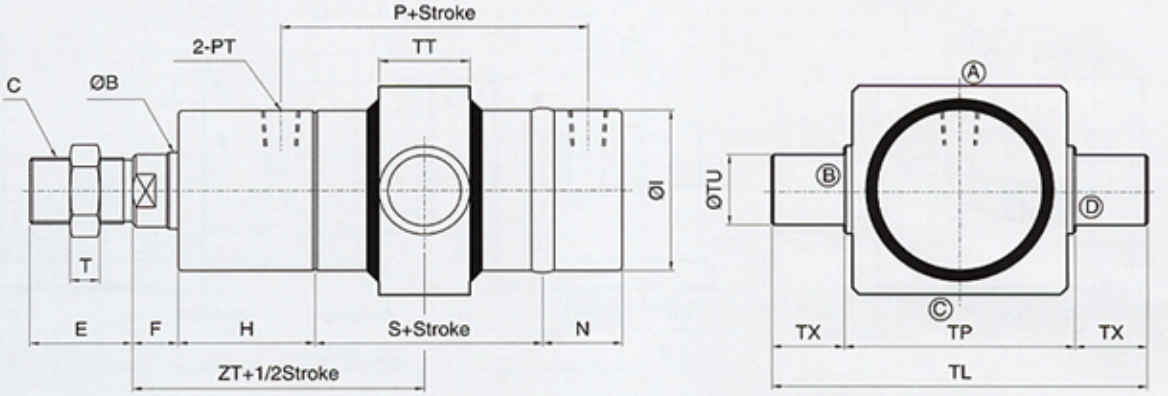

ROD ROD+TC TYPE

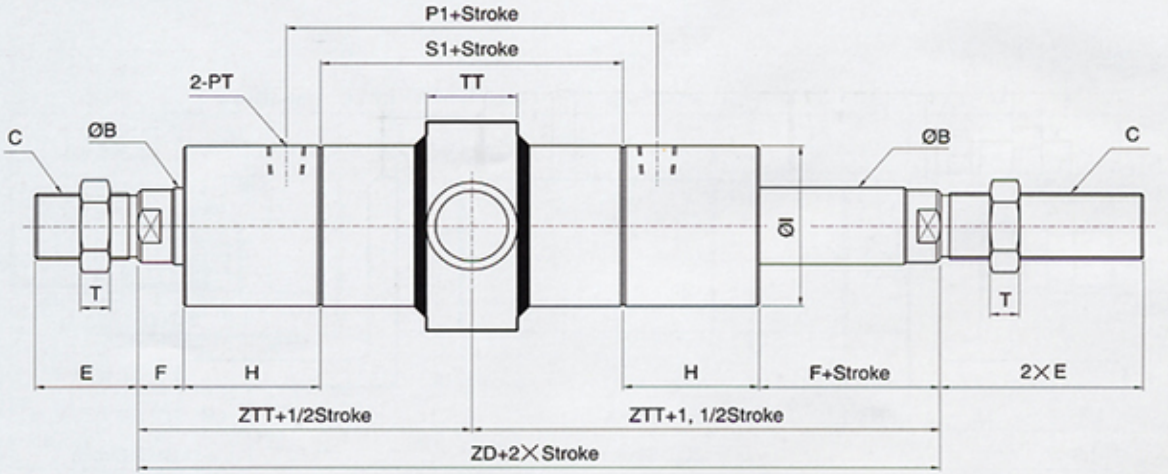

ROA-ROD TYPE																		TC TYPE				
BORE \ SIZE	ØB	C	E	F	H	ØI	N	P	P1	PM	PT	S	S1	T	ZT	ZTT	ZD	ØTU	TL	TP	TT	TX
Ø40	20	M16XP1.5	28	17	50	50	25	86	107	30	3/8	61	82	8	97.5	108	216	20	115	75	28	20
Ø50	25	M22XP1.5	40	20	50	60	30	96	112	35	3/8	66	87	13	103	113.5	227	25	140	90	33	25
Ø63	35	M30XP1.5	45	20	60	73	35	105	125	35	3/8	70	95	13	115	127.5	255	32	166	102	40	32
Ø80	40	M30XP1.5	45	20	60	95	40	127.5	150	50	1/2	90	120	13	125	140	280	32	184	120	43	32
Ø100	50	M40XP2.0	55	25	60	114	40	147.5	180	60	1/2	110	150	15	140	160	320	40	220	140	53	40
Ø125	60	M50XP2.0	70	30	70	140	50	172.5	210	70	3/4	125	170	15	162.5	185	370	50	275	175	58	50

備註：

1.軸心加大或縮小時如未註明長度尺寸時,依照本公司規定自行加工。
2.RO40系列行程超過 500mm以上時,軸心牙加大為M18*P1.5。
3.RO系列行程超過1499mm時,活塞(PM)長度依據規格表組裝.行程如超過1500mm以上時,活塞長度(PM)請參閱特性資料表。
4.前蓋螺帽(ØJ)與軸心螺帽(ØW)規格大於M50時,其外徑為圓型.W,J指其外徑。

1.The length and size of axis were not specifide to constructed must be according to our company design's modify without prior notice.
2.The series stroke exceed 500mm (includes), axletree broaden be M18xP1.5.
3.When this series of stroke exceeds(includes) 1500mm, as see the property information for the length of the piston. Within 1499mm see the (PM) length of piston.
4.External diameter is round (W, J),when rod cover(ØJ) and rod nut (ØW) exceed M50.

ASHUN

圓型中型油壓缸CA,CB尺寸圖
14Mpa RO Series CA,CB Dimensional Features

ROC ROC TYPE

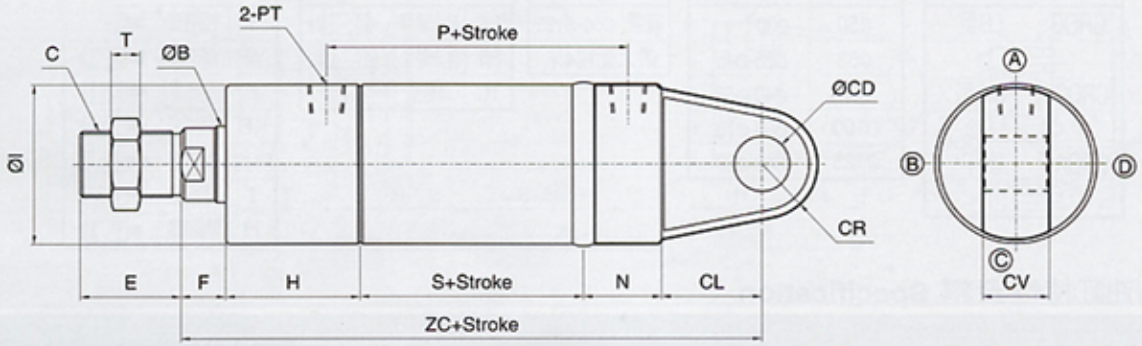

ROCB ROCB TYPE

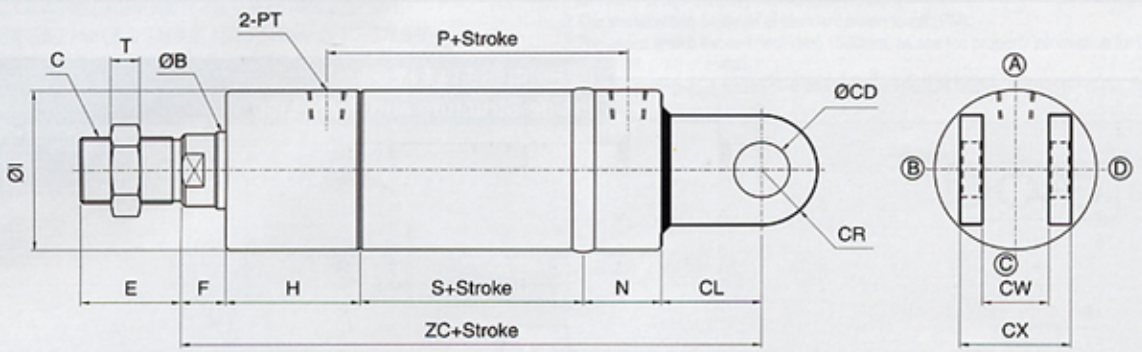

RO TYPE														CA,CB TYPE					
BORE \ SIZE	ØB	C	E	F	H	ØI	N	P	PM	PT	S	T	ZC	ØCD	CL	CR	CV	CW	CX
Ø40	20	M16XP1.5	28	17	50	50	25	86	30	3/8	61	8	178	16	25	18	25	26	41
Ø50	25	M22XP1.5	40	20	50	60	30	96	35	3/8	66	13	201	20	35	25	25	26	46
Ø63	35	M30XP1.5	45	20	60	73	35	105	35	3/8	70	13	230	25	45	30	30	31	56
Ø80	40	M30XP1.5	45	20	60	95	40	127.5	50	1/2	90	13	260	30	50	30	35	36	66
Ø100	50	M40XP2.0	55	25	60	114	40	147.5	60	1/2	110	15	295	35	60	35	40	41	81
Ø125	60	M50XP2.0	70	30	70	140	50	172.5	70	3/4	125	15	345	50	70	50	55	56	106

備註：

1.軸心加大或縮小時如未註明長度尺寸時,依照本公司規定自行加工。
2.RO40系列行程超過 500mm以上時,軸心牙加大為M18*P1.5。
3.RO系列行程超過1499mm時,活塞(PM)長度依據規格表組裝,行程如超過1500mm以上時,活塞長度(PM)請參閱特性資料表。
4.前蓋螺帽(OJ)與軸心螺帽(OW)規格大於M50時,其外徑為圓型,W,J指其外徑。

1.The length and size of axis were not specifide to constructed must be according to our company design's modify without prior notice.
2.The series stroke exceed 500mm (includes), axletree broaden be M18xP1.5.
3.When this series of stroke exceeds(includes) 1500mm, as see the property information for the length of the piston. Within 1499mm see the (PM) length of piston.
4.External diameter is round (W, J),when rod cover(OJ) and rod nut (OW) exceed M50.

CRO- 圓型(焊1 PT)油壓缸系列(14Mpa)
Hydraulic Cylinders Series ..... P. 92

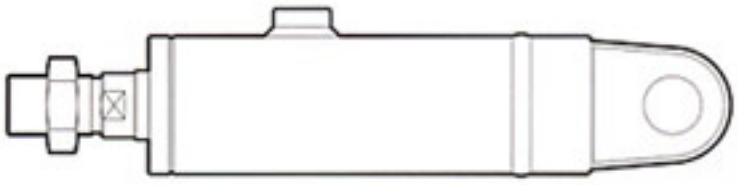

CROC CRO+CA TYPE
CROCB CRO+CB TYPE ..... P. 93

CROA CROA+FA TYPE
CROB CROB+FB TYPE ..... P. 94

CROB CROB TYPE
CROA CROA+TC TYPE ..... P. 95

CRO□

圓型(焊1PT)油壓缸採購指南 14Mpa Hydraulic Cylinders How to order

CROC | 63 * Ø35 * 100ST | LB + Y

型 式 TYPE

CROB	LB型
CROC	CA型
CROA	後平

缸內徑 CYLINDER BORE	軸心ROD 標準-可加大至
Ø50	Ø30
Ø63	Ø35-Ø45
Ø80	Ø40-Ø55
Ø100	Ø50-Ø70
Ø125	Ø60-Ø80

行 程 STROKE

鋼管	Ø50-Ø125
最大衝程4米	

缸體固定型式 ACCESSORY

FA	前法蘭型
FB	後法蘭型
TC	耳軸型

軸心固定型式 ACCESSORY

Y	Y型接頭
YP	Y附PIN
I	I型接頭
KG	浮動接頭
PHS	魚眼接頭
T	T型接頭
H	焊蓋接頭

圓型油缸特性資料 Specification

油壓缸內徑 Bore sizes of cylinder(mm)	Ø50	Ø63	Ø80	Ø100	Ø125
工作媒介 Power fluid	以濾清之標準液壓油 Filtered oil				
缸管材質 Material of cylinder bareel	碳鋼管 Carbon steel STKM-13C				
使用壓力範圍 The range of pressure(kg/cm²)	0.3-14MPa(3-140kg/cm²)				
使用溫度範圍 The range of temperature(°C)	-10°~+60°(C°)				
使用速度範圍 The range of speed(mm/sec)	8~300(mm/sec)				
行程於1500~3500mm時,活塞(PM)長度	90	100	100	120	140
行程於3501~6000mm時,活塞(PM)長度	120	150	150	180	200

圓型油壓缸結構圖 Inside Structure and Parts List

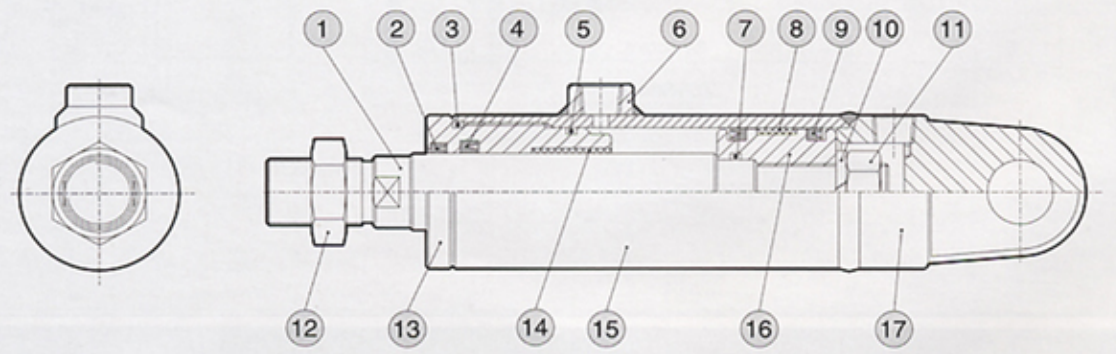

NO	零件名 Part mane		數量 Quantity	NO	零件名 Part mane		數量 Quantity	NO	零件名 Part mane		數量 Quantity
1	活塞桿	Piston rod	1	7	O型環	Gasket	1	13	前蓋	Rod cover	1
2	刮油環	Dust wiper	1	8	耐磨環	Wearing ring	1	14	乾式軸承	Frimet	1
3	O型環	Gasket	1	9	橡膠活塞環	Piston packing	2	15	缸管本體	Cylinder tube	1
4	軸用油封	Rod packiog	1	10	彈簧華司	Spring washer	1	16	活塞本體	Piston	1
5	O型環	Gasket	1	11	螺帽	Nut	1	17	後蓋	End cover	1
6	PT接頭	PT Connectors	1	12	軸心螺帽	Ror nut	1				

圓型(焊1PT)油壓缸CA,CB尺寸圖
14Mpa CRO Series CA,CB Dimensional Features

CROC CRO+CA TYPE

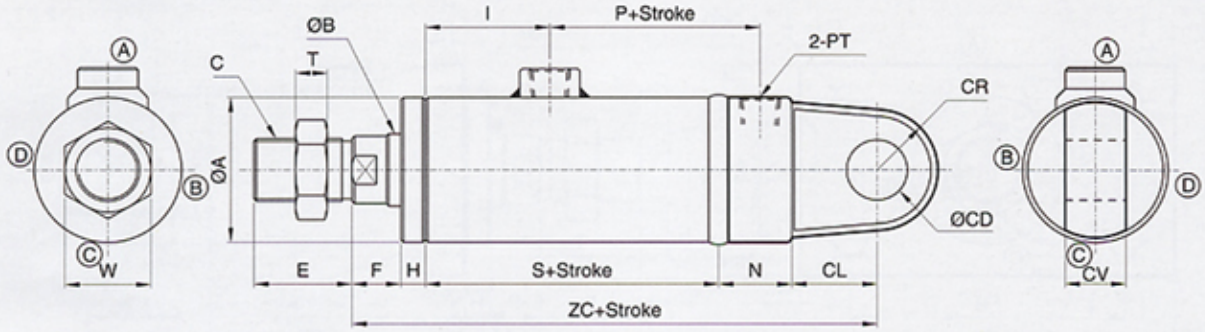

CRO TYPE																CA TYPE			
BORE \ SIZE	ØA	ØB	C	E	F	H	I	N	P	PM	PT	S	W	T	ZC	ØCD	CL	CV	CR
Ø50	60	30	M26XP1.5	40	20	10	56	30	71	45	3/8	110	35	13	205	25	35	25	25
Ø63	73	35	M30XP1.5	45	25	10	56	35	79	50	3/8	115	41	13	230	30	45	30	30
Ø80	95	40	M30XP1.5	50	25	15	64	40	83	50	3/8	125	41	13	255	30	50	35	30
Ø100	114	50	M40XP2.0	55	25	20	78	40	94	60	1/2	150	55	15	295	35	60	40	35
Ø125	140	60	M50XP2.0	70	35	20	78	50	109	70	1/2	160	65	15	335	50	70	55	50

備註：

1.軸心加大或縮小時如未註明長度尺寸時,依照本公司規定自行加工。
2.本系列規格表之PM代表為活塞長度,行程於1499mm以下之標準長度。
3.本系列行程如超過1500mm(含)以上時,活塞長度(PM)請參閱特性資料表。
4.本系列另有CA孔與PT孔一直線(CA反裝)之做法。

1.The length and size of axis were not specifide to constructed must be according to our company design's modify without prior notice.
2.The stroke within 1499mm of standard piston length(PM).
3.The series stroke exceed (includes) 1500mm, as see the property information for increased the length (PM) of piston.
4.Second setting ØCA and ØPT is on the same line.(CA reverse setting.)

CROCB CRO+CB TYPE

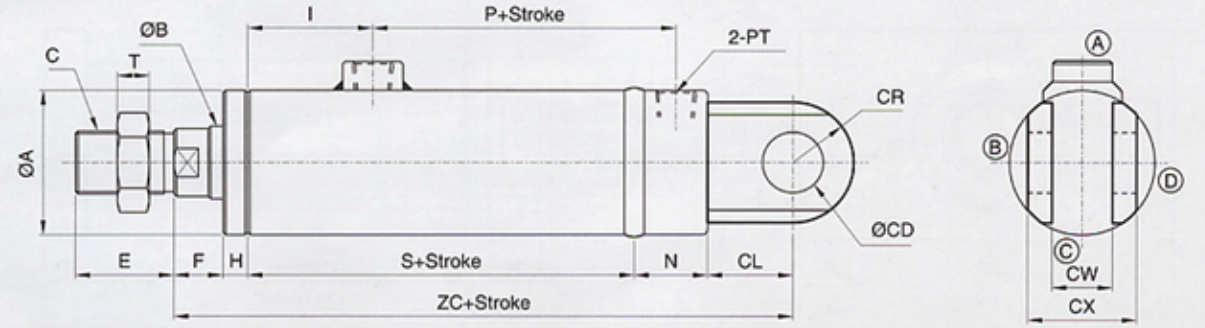

CRO TYPE															CB TYPE				
BORE \ SIZE	ØA	ØB	C	E	F	H	I	N	P	PM	PT	S	T	ZC	ØCD	CL	CR	CW	CX
Ø50	60	30	M26XP1.5	40	20	10	56	30	71	45	3/8	110	13	205	25	35	25	26	46
Ø63	73	35	M30XP1.5	45	25	10	56	35	79	50	3/8	115	13	230	30	45	30	31	56
Ø80	95	40	M30XP1.5	50	25	15	64	40	83	50	3/8	125	13	255	30	50	30	36	66
Ø100	114	50	M40XP2.0	55	25	20	78	40	94	60	1/2	150	15	295	35	60	35	41	81
Ø125	140	60	M50XP2.0	70	35	20	78	50	109	70	1/2	160	15	335	50	70	50	56	106

備註：

1.軸心加大或縮小時如未註明長度尺寸時,依照本公司規定自行加工。
2.本系列規格表之PM代表為活塞長度,行程於1499mm以下之標準長度。
3.本系列行程如超過1500mm(含)以上時,活塞長度(PM)請參閱特性資料表。
4.本系列另有CB孔與PT孔一直線(CB反裝)之做法。

1.The length and size of axis were not specifide to constructed must be according to our company design's modify without prior notice.
2.The stroke within 1499mm of standard piston length(PM).
3.The series stroke exceed (includes) 1500mm, as see the property information for increased the length (PM) of piston.
4.Second setting ØCB and ØPT is on the same line.(CB reverse setting.)

CRO-FA,FB

圓型(焊1PT)中型油壓缸FA,FB板尺寸圖
14Mpa CRO Series FA,CB Dimensional Features

CROA CROA+FA TYPE

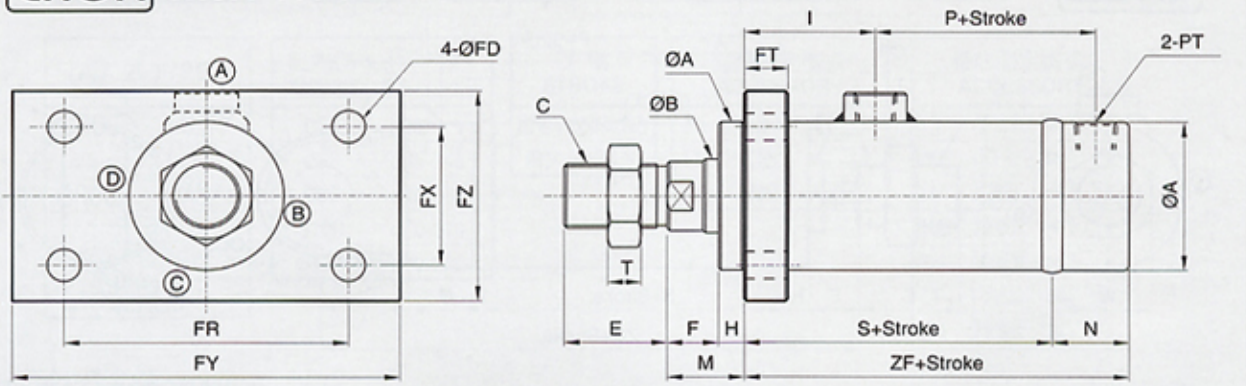

BORE \ SIZE	CRO TYPE															FA TYPE					
	ØA	ØB	C	E	F	H	I	M	N	P	PM	PT	S	T	ZF	ØFD	FT	FR	FX	FY	FZ
Ø50	60	30	M26XP1.5	40	20	10	56	30	30	71	45	3/8	110	13	140	14	17	110	56	150	85
Ø63	73	35	M30XP1.5	45	25	10	56	35	35	79	50	3/8	115	13	150	14	17	126	68	155	95
Ø80	95	40	M30XP1.5	50	25	15	64	40	40	83	50	3/8	125	13	165	18	20	152	75	190	120
Ø100	114	50	M40XP2.0	55	25	20	78	45	40	94	60	1/2	150	15	190	20	20	180	100	220	140
Ø125	140	60	M50XP2.0	70	35	20	78	55	50	109	70	1/2	160	15	210	24	30	222	122	280	170

備註：

1.本系列軸心加大如未註明長度尺寸時,依照本公司規定自行加工。
2.本系列規格表之PM代表為活塞長度.行程於1499mm以下之標準長度。
3.本系列行程如超過1500mm(含)以上時.活塞長度(PM)請參閱特性資料表。

1.The length and size of axis were not specifide to constructed must be according to our company design's modify without prior notice.
2.The stroke within 1499mm of standard piston length(PM).
3.The series stroke exceed (includes) 1500mm, as see the property information for increased the length (PM) of piston.

CROB CROB+FB TYPE

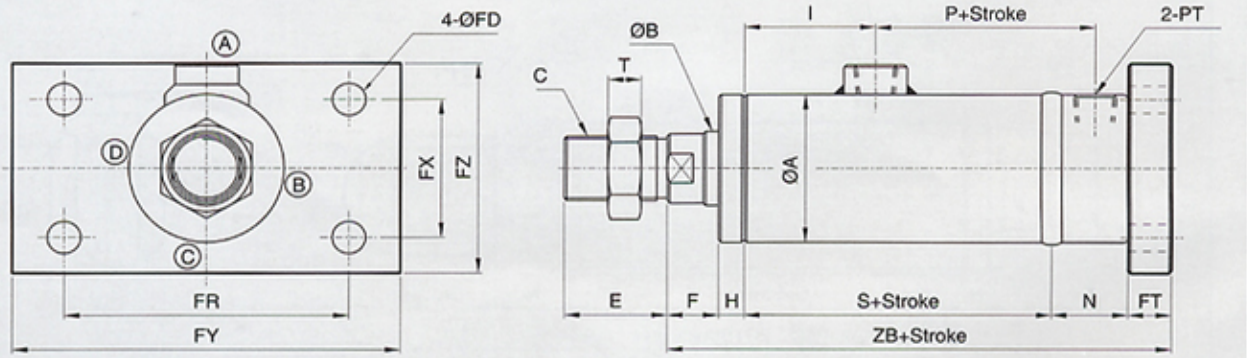

BORE \ SIZE	CRO TYPE															FB TYPE					
	ØA	ØB	C	E	F	H	I	N	P	PM	PT	S	T	ZB		ØFD	FT	FR	FX	FY	FZ
Ø50	60	30	M26XP1.5	40	20	10	56	30	71	45	3/8	110	13	187		14	17	110	56	150	85
Ø63	73	35	M30XP1.5	45	25	10	56	35	79	50	3/8	115	13	202		14	17	126	68	155	95
Ø80	95	40	M30XP1.5	50	25	15	64	40	83	50	3/8	125	13	225		18	20	152	75	190	120
Ø100	114	50	M40XP2.0	55	25	20	78	40	94	60	1/2	150	15	255		20	20	180	100	220	140
Ø125	140	60	M50XP2.0	70	35	20	78	50	109	70	1/2	160	15	295		24	30	222	122	280	170

備註：

1.本系列軸心加大如未註明長度尺寸時,依照本公司規定自行加工。
2.本系列規格表之PM代表為活塞長度.行程於1499mm以下之標準長度。
3.本系列行程如超過1500mm(含)以上時.活塞長度(PM)請參閱特性資料表。

1.The length and size of axis were not specifide to constructed must be according to our company design's modify without prior notice.
2.The stroke within 1499mm of standard piston length(PM).
3.The series stroke exceed (includes) 1500mm, as see the property information for increased the length (PM) of piston.

圓型(焊1PT)油壓缸LB型,TC尺寸圖
14Mpa CRO Series LB,TC Dimensional Features

CROB TYPE

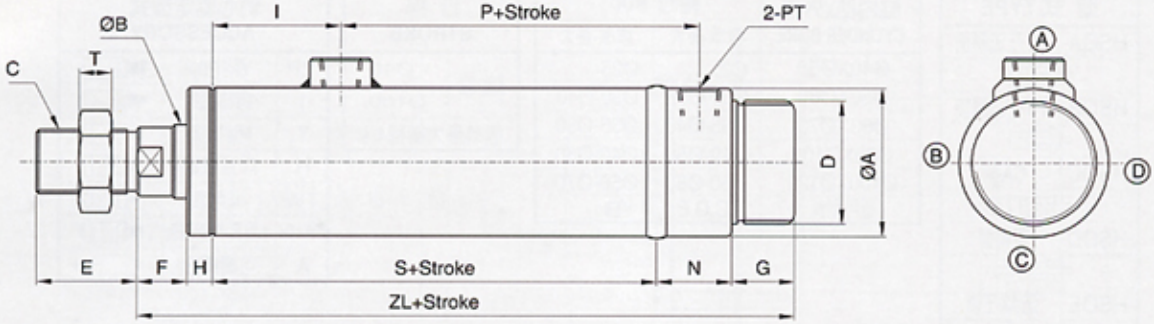

CRO TYPE																
BORE \ SIZE	ØA	ØB	C	D	E	F	G	H	I	N	P	PM	PT	S	T	ZL
Ø50	60	30	M26XP1.5	M50XP2.0	40	20	25	10	56	30	71	45	3/8	110	13	195
Ø63	73	35	M30XP1.5	M60XP2.0	45	25	30	10	56	35	79	50	3/8	115	13	215
Ø80	95	40	M30XP1.5	M70XP2.0	50	25	30	15	64	40	83	50	3/8	125	13	235
Ø100	114	50	M40XP2.0	M90XP2.0	55	25	30	20	78	40	94	60	1/2	150	15	265
Ø125	140	60	M50XP2.0	M120XP2.0	70	35	30	20	78	50	109	70	1/2	160	15	295

備註：

1.本系列軸心加大如未註明長度尺寸時,依照本公司規定自行加工。
2.本系列規格表之PM代表為活塞長度,行程於1499mm以下之標準長度。
3.本系列行程如超過1500mm(含)以上時,活塞長度(PM)請參閱特性資料表。

1.The length and size of axis were not specifide to constructed must be according to our company design's modify without prior notice.
2.The stroke within 1499mm of standard piston length(PM).
3.The series stroke exceed (includes) 1500mm, as see the property information for increased the length (PM) of piston.

CROA CROA+TC TYPE

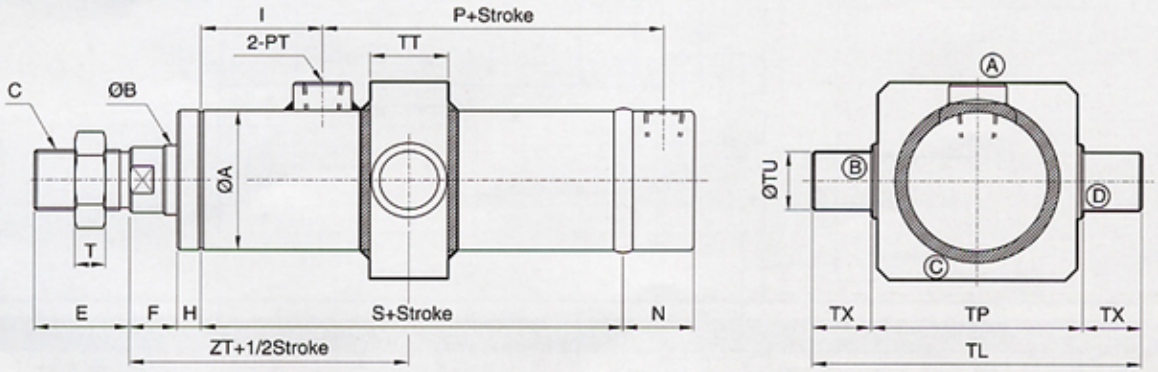

CRO TYPE															TC TYPE				
BORE \ SIZE	ØA	ØB	C	E	F	H	I	N	P	PM	PT	S	T	ZT	ØTU	TP	TL	TT	TX
Ø50	60	30	M26XP1.5	40	20	10	56	30	71	45	3/8	110	13	85	25	90	140	33	25
Ø63	73	35	M30XP1.5	45	25	10	56	35	79	50	3/8	115	13	92.5	32	102	166	40	32
Ø80	95	40	M30XP1.5	50	25	15	64	40	83	50	3/8	125	13	102.5	32	120	184	43	32
Ø100	114	50	M40XP2.0	55	25	20	78	40	94	60	1/2	150	15	120	40	140	220	53	40
Ø125	140	60	M50XP2.0	70	35	20	78	50	109	70	1/2	160	15	135	50	175	275	58	50

備註：

1.本系列軸心加大如未註明長度尺寸時,依照本公司規定自行加工。
2.本系列規格表之PM代表為活塞長度,行程於1499mm以下之標準長度。
3.本系列行程如超過1500mm(含)以上時,活塞長度(PM)請參閱特性資料表。

1.The length and size of axis were not specifide to constructed must be according to our company design's modify without prior notice.
2.The stroke within 1499mm of standard piston length(PM).
3.The series stroke exceed (includes) 1500mm, as see the property information for increased the length (PM) of piston.

HSO- 圓型油壓缸系列(21Mpa) Hydraulic Cylinders Series ..... P. 96

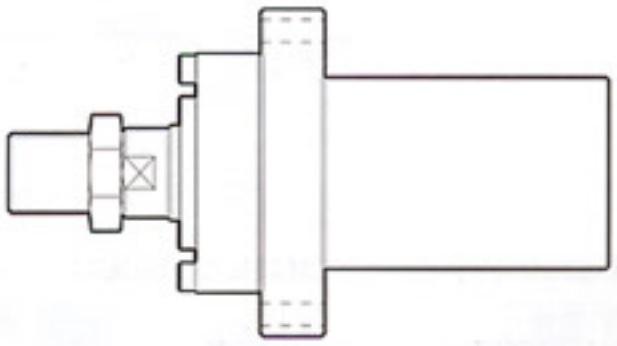

HSOA HSOA TYPE

HSOD HSOD+AST (雙軸型附可調桿) TYPE ..... P. 97

HSOB HSOB TYPE

HSOE HSOE TYPE ..... P. 98

HSOC HSOC TYPE ..... P. 99

HSO□

圓型油壓缸採購指南 21Mpa Hydraulic Cylinders How to order

HSOA Ø50 * Ø30 * 100ST + Y

型 式 TYPE	
HSOA	PT在法蘭前
HSOB	PT在法蘭後
HSOC	CA型
HSOD	雙軸型
HSOE	法蘭在後

缸內徑x外徑 CYLINDER BORE	軸心 ROD 標準-最大	軸心 ROD 標準-最大
Ø40XØ50	Ø25	Ø25
Ø50XØ60	Ø30-Ø35	Ø30-Ø40
Ø63XØ73	Ø35-Ø40	Ø35-Ø50
Ø80XØ100	Ø40-Ø50	Ø40-Ø60
Ø100XØ120	Ø50-Ø60	Ø50-Ø70
適用型式	A,C,D,E	B

行 程 STROKE	
鋼管	Ø40 ~ Ø100
標準最大衝程4米	

軸心固定型式 ACCESSORY	
YP	Y附PIN
I	I型接頭
T	T型接頭
H	焊套接頭
TW	半月套
TW+TH	半月套+焊接頂板
A	可調螺帽

圓型油缸特性資料 Specification

油壓缸內徑 Bore sizes of cylinder(mm)	Ø40	Ø50	Ø63	Ø80	Ø100
工作媒介 Power fluid	以濾清之標準液壓油 Filtered oil				
缸管材質 Material of cylinder bareel	碳鋼管 Carbon steel STKM-13A~C				
使用壓力範圍 The range of pressure(kg/cm²)	0.3-21MPa(3-210kg/cm²)				
使用溫度範圍 The range of temperature(°C)	-30°~+100°(C°)				
使用速度範圍 The range of speed(mm/sec)	500(mm/sec)				
行程於1500~25000mm時,活塞(PM)長度	60	70	70	80	100
行程於2501~4000mm時,活塞(PM)長度	120	140	140	150	180

圓型油壓缸結構圖 Inside Structure and Parts List

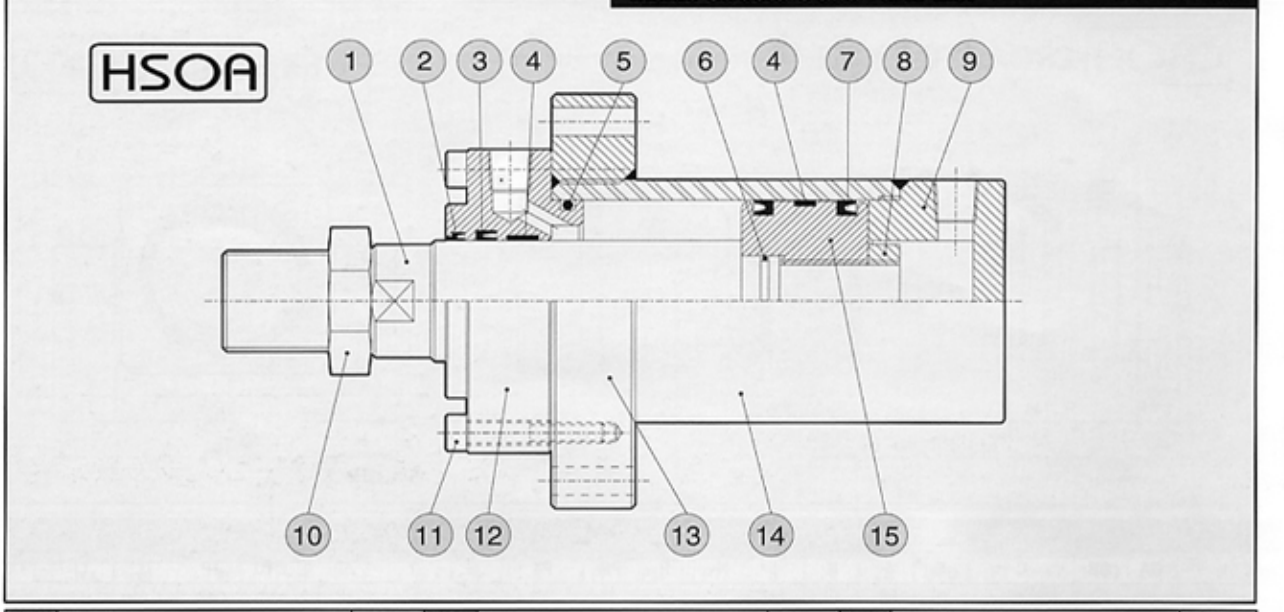

NO	零件名 Part mane		數量 Quantity	NO	零件名 Part mane		數量 Quantity	NO	零件名 Part mane		數量 Quantity
1	活塞桿	Piston rod	1	6	O型環	Gasket	1	11	緊緊螺絲	Tip bolt	N
2	刮油環	Dust wiper	1	7	活塞油封	Piston packing	2	12	前蓋	Rod cover	1
3	軸用油封	Rod packing	1	8	固定螺帽	Nut	1	13	本體固定板	Front flange	1
4	耐磨環	Wearing ring	2	9	後蓋	End cover	1	14	缸管本體	Cylinder tube	1
5	O型環	Gasket	1	10	軸心螺帽	Rod nut	1	15	活塞本體	Piston	1

ASHUN

圓型油壓缸A,D尺寸圖
21Mpa Hydrsulic Cylinders A,D Dimensional Features

HSOA HSOA TYPE

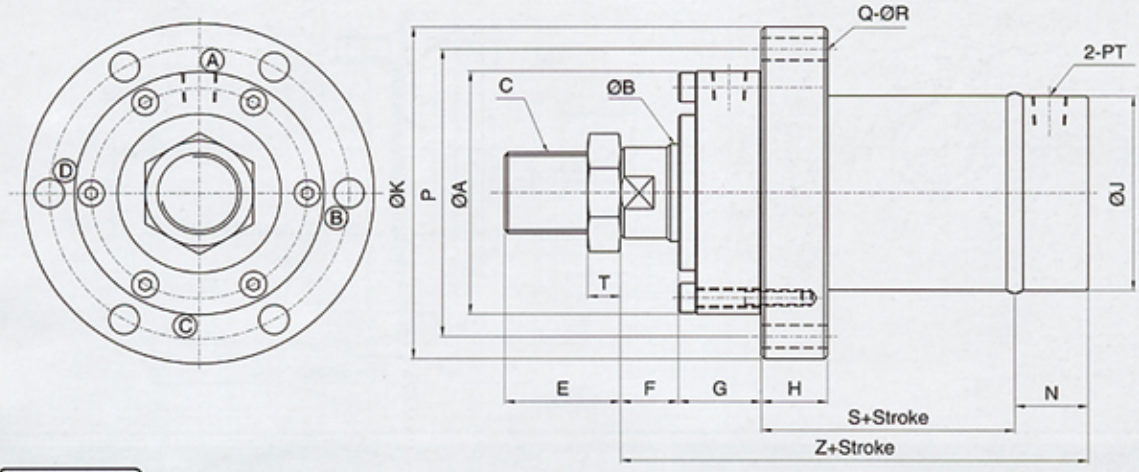

HSOD HSOD+AST (雙軸型附可調帽) TYPE

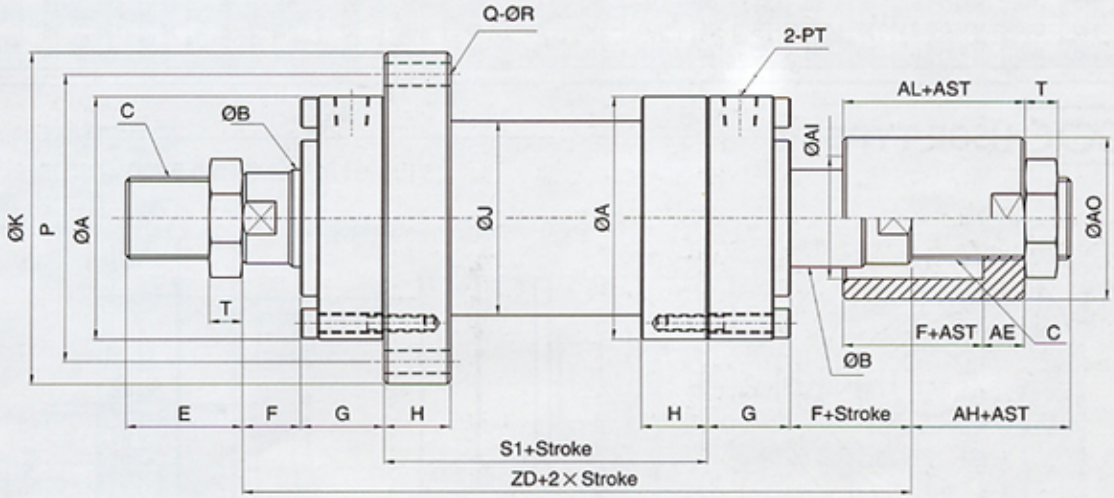

HSOA-HSOD TYPE																						A(可調帽) TYPE			
BORE \ SIZE	A	B	C	E	F	G	H	J	K	N	P	PM	PT	Q	R	S	S1	T	Z	ZD	AH	AE	AI	AL	AO
Ø40	75	Ø25	M22XP1.5	35	20	40	20	50	115	30	95	30	3/8	4	10	60	60	13	150	180	35	20	32	40	45
Ø50	90	Ø30	M26XP1.5	40	20	40	25	60	140	35	115	35	3/8	6	10	65	65	13	160	185	40	25	37	45	50
Ø63	110	Ø35	M30XP1.5	45	20	40	30	76	160	40	135	35	1/2	6	12	65	65	13	165	185	40	25	42	45	60
Ø80	130	Ø40	M36XP2.0	55	25	50	35	100	190	40	160	50	1/2	6	14	80	80	15	195	230	45	30	47	55	70
Ø100	150	Ø50	M40XP2.0	60	30	55	40	120	210	50	180	60	1/2	6	18	90	90	15	225	260	50	35	57	65	90

備註：

1.本系列軸心加大或縮小時如未註明長度尺寸時,依照本公司規定自行加工。
2.本系列行程如超過1500mm(含)以上時,活塞長度(PM)請參閱特性資料表。
3.AST為客戶指定之可調行程。

1.The length and size of the axis were not specifide when being enlarged or reduced. The size of the axis will be constructed according to the specification tablet.
2.When this series of stroke exceeds(includes) 1500mm,the piston(PM) must be increased see the property information for the length of the piston.
3.AST is the custom made adjustable stroke.

Series
HSOB,HSOE

圓型油壓缸B,E尺寸圖
21Mpa Hydrsulic Cylinders B,E Type Dimensional Features

HSOB HSOB TYPE

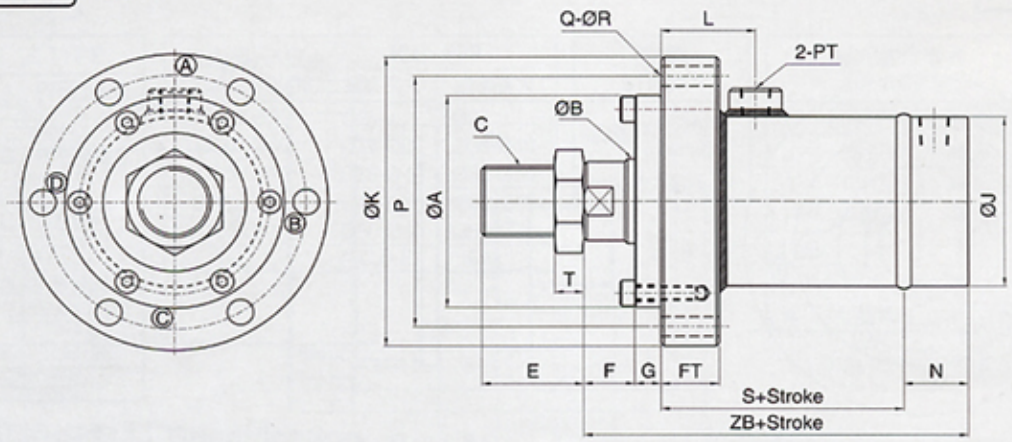

HSOB TYPE

BORE \ SIZE	A	B	C	E	F	G	FT	J	K	L	N	P	PM	PT	Q	R	S	T	ZB
Ø40	75	Ø25	M22XP1.5	35	20	15	20	50	115	40	30	95	30	3/8	4	10	90	13	155
Ø50	90	Ø30	M26XP1.5	40	20	15	25	60	140	45	35	115	35	3/8	6	10	100	13	170
Ø63	110	Ø35	M30XP1.5	45	20	15	30	76	160	55	40	135	35	1/2	6	12	110	13	185
Ø80	130	Ø40	M36XP2.0	55	25	20	35	100	190	60	40	160	50	1/2	6	14	130	15	215
Ø100	150	Ø50	M40XP2.0	60	30	20	40	120	210	70	50	180	60	1/2	6	18	150	15	250

HSOE HSOE TYPE

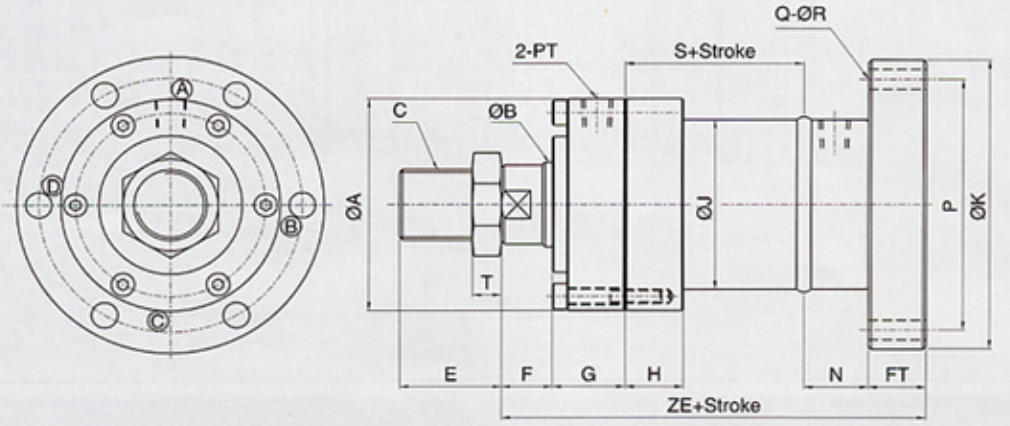

HSOE TYPE

BORE \ SIZE	A	B	C	E	F	FT	G	H	J	K	N	P	PM	PT	Q	R	S	T	ZE
Ø40	75	Ø25	M22XP1.5	35	20	20	40	20	50	115	30	95	30	3/8	4	10	60	13	170
Ø50	90	Ø30	M26XP1.5	40	20	25	40	25	60	140	35	115	35	3/8	6	10	65	13	185
Ø63	110	Ø35	M30XP1.5	45	20	30	40	30	76	160	40	135	35	1/2	6	12	65	13	195
Ø80	130	Ø40	M36XP2.0	55	25	35	50	35	100	190	40	160	50	1/2	6	14	80	15	230
Ø100	150	Ø50	M40XP2.0	60	30	40	55	40	120	210	50	180	60	1/2	6	18	90	15	265

備註：

1.本系列軸心加大或縮小時如未註明長度尺寸時,依照本公司規定自行加工。

2.本系列行程如超過1500mm(含)以上時,活塞長度(PM)請參閱特性資料表。

1.The length and size of the axis were not specilide when being enlarged or reduced. The size of the axis will be constructed according to the specilication tablet.

2.When this series of stroke exceeds(includes) 1500mm,the piston(PM) must be increased see the property information for the length of the piston.

ASHUN

圓型油壓缸CA尺寸圖
21Mpa Hydrsulic Cylinders CA Dimensional Features

HSOC HSOC TYPE

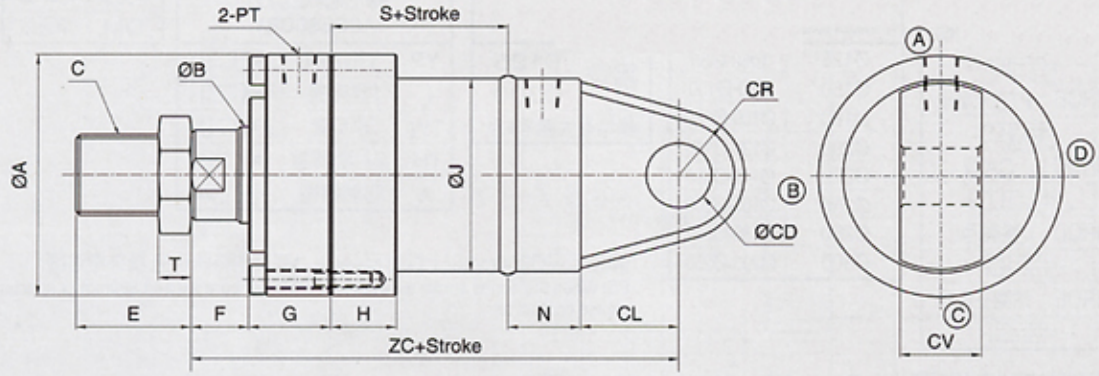

BORE \ SIZE	HSOC TYPE																CA TYPE			
	A	B	C	E	F	G	H	J	N	PM	PT	Q	R	S	T	ZC	CD	CL	CV	CR
Ø40	75	Ø25	M22XP1.5	35	20	40	20	50	30	30	3/8	4	10	60	13	185	20	35	25	25
Ø50	90	Ø30	M26XP1.5	40	20	40	25	60	35	35	3/8	6	10	65	13	205	25	45	30	30
Ø63	110	Ø35	M30XP1.5	45	20	40	30	76	40	35	1/2	6	12	65	13	215	30	50	35	30
Ø80	130	Ø40	M36XP2.0	55	25	50	35	100	40	50	1/2	6	14	80	15	255	35	60	40	35
Ø100	150	Ø50	M40XP2.0	60	30	55	40	120	50	60	1/2	6	18	90	15	295	50	70	55	50

軸心車溝尺寸圖
Axis lathe groove dimensional feature

配件:半月套+圓板尺寸圖
Accessories:woodruff washer + round board dimensional feature

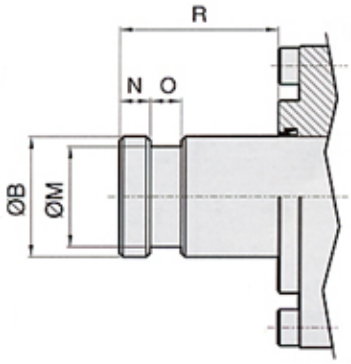

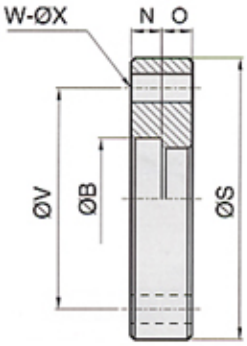

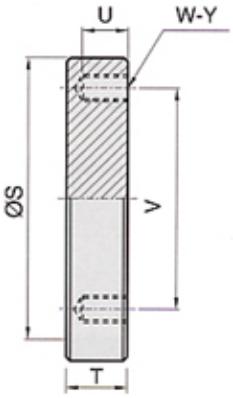

BORE \ SIZE	心車溝略圖					TW TYPE 半月套								TH TYPE 焊套圓板					
	B	M	N	O	R	B	M	N	O	S	V	W	ØX	S	T	U	V	W	Y
Ø40	Ø25	Ø18	8	8	40	Ø25	Ø18	8	8	75	50	4	10	75	20	14	50	4	M8XP1.25
Ø50	Ø30	Ø22	10	10	45	Ø30	Ø22	10	10	85	60	4	10	85	25	20	60	4	M8XP1.25
Ø60	Ø35	Ø27	10	10	45	Ø35	Ø27	10	10	105	75	6	10	105	25	20	75	6	M8XP1.25
Ø80	Ø40	Ø32	10	10	50	Ø40	Ø32	10	10	120	90	6	12	120	25	20	90	6	M10XP1.5
Ø100	Ø50	Ø42	15	15	60	Ø50	Ø42	15	15	130	100	6	12	130	30	25	100	6	M10XP1.5

備註:

1.本系列軸心加大或縮小時如未註明長度尺寸時,依照本公司規定自行加工。
2.本系列行程如超過1500mm(含)以上時,活塞長度(PM)請參閱特性資料表。

1.The length and size of the axis were not specifide when being enlarged or reduced. The size of the axis will be constructed according to the specification tablet.
2.When this series of stroke exceeds(includes) 1500mm,the piston(PM) must be increased see the property information for the length of the piston.

HRO-大型圓型油壓缸系列(21Mpa) Hydraulic Cylinders P.100

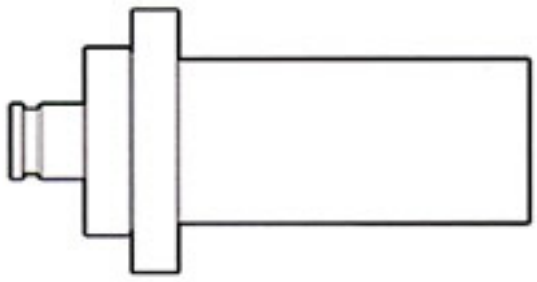

HROA HROA TYPE
HROD HROD + AST (雙軸型附可調帽) TYPE ..... P. 101
HROB HROB TYPE ..... P. 102
HROC HROC TYPE ..... P. 103
HROE HROE TYPE ..... P. 104
HRO 油壓系列軸心配件
Accessories for Hydraulic Series Cylinders
TW半月套 TW ROD END MOUNTING
TH焊接圓板 TH ROD END MOUNTING ..... P. 105

HRO□

大型圓型油壓缸採購指南 21Mpa Hydraulic Cylinders How to order

HROA | Ø125 * Ø60 * 100ST + Y + DM

型 式 TYPE	
HROA	PT在法蘭前
HROB	PT在法蘭後
HROC	CA型
HROD	雙軸型
HROE	法蘭在後側

缸內徑 CYLINDER BORE	軸心 ROD 標準-最大
Ø125	Ø60-Ø80
Ø150	Ø80-Ø100
Ø180	Ø100-Ø120
Ø200	Ø120-Ø140
Ø225	Ø140-Ø160
Ø250	Ø160-Ø200
Ø280	Ø180-Ø220
Ø300	Ø200-Ø250

行 程 STROKE	
鋼管	Ø125 ~ Ø300
標準最大衝程4米	

軸心固定型式 ACCESSORY		
YP	Y附PIN	
I	I型接頭	
TW	半月套	
TH	半月套+焊套	
A	可調螺帽	

無記號	心車溝
DM	車牙型

備註:缸徑Ø300mm以上或行程4米以上或其他特殊規格,請來電洽詢!
PS: When the series stroke exceed 4m or cylinder bore exceed 300mm or special size, please contact us.

大型圓型油缸特性資料 Specification

油壓缸內徑 Bore sizes of cylinder(mm)	Ø125	Ø150	Ø180	Ø200	Ø225	Ø250	Ø280	Ø300
工作媒介 Power fluid	以濾清之標準液壓油 Filtered oil							
缸管材質 Material of cylinder bareel	碳鋼管 Carbon steel STKM-13A~C							
使用壓力範圍 The range of pressure(kg/cm²)	1-21MPa 10-210kg/cm²							
使用溫度範圍 The range of temperature(°C)	-30°~+100°(C°)							
使用速度範圍 The range of speed(mm/sec)	500 (mm/sec)							
行程於1500~2500mm時,活塞(PM)長度	120	120	140	140	140	140	140	150
行程於2501~4000mm時,活塞(PM)長度	200	200	200	200	200	200	200	250

圓型油壓缸結構圖 Inside Structure and Parts List

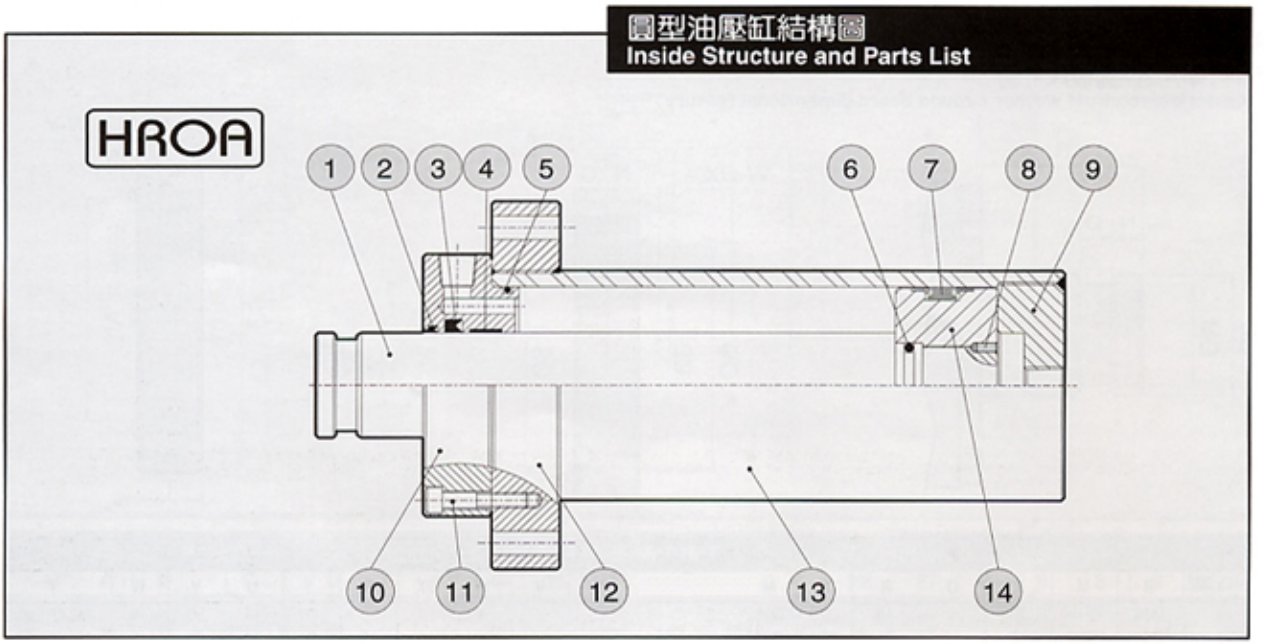

NO	零件名	Part mane	數量 Quantity	NO	零件名	Part mane	數量 Quantity	NO	零件名	Part mane	數量 Quantity
1	活塞桿	Piston rod	1	6	O型環	Gasket	1	11	緊緊螺絲	Tip bolt	N
2	刮油環	Dust wiper	1	7	活塞油封	Piston packing	1	12	本體固定板	Front flange	1
3	軸用油封	Rod packing	1	8	止動螺絲	Set screw	2	13	缸管本體	Cylinder tube	1
4	耐磨環	Wearing ring	1	9	後蓋	End cover	1	14	活塞本體	Piston	1
5	O型環	Gasket	1	10	前蓋	Rod cover	1				

大型圓型油壓缸外觀尺寸圖
21Mpa HRO Series Dimensional Features

HROA HROA TYPE

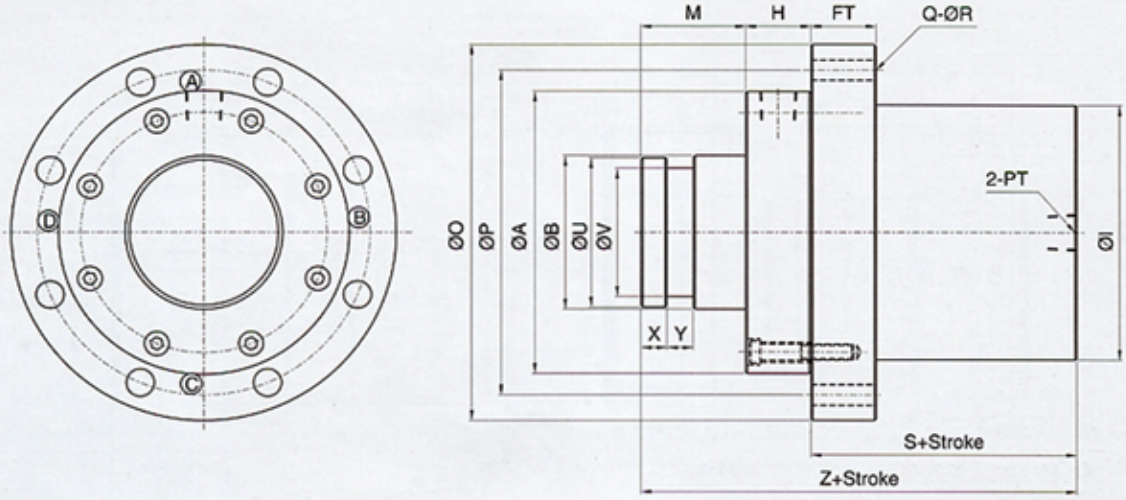

HROD HROD+AST (雙軸型附可調帽) TYPE

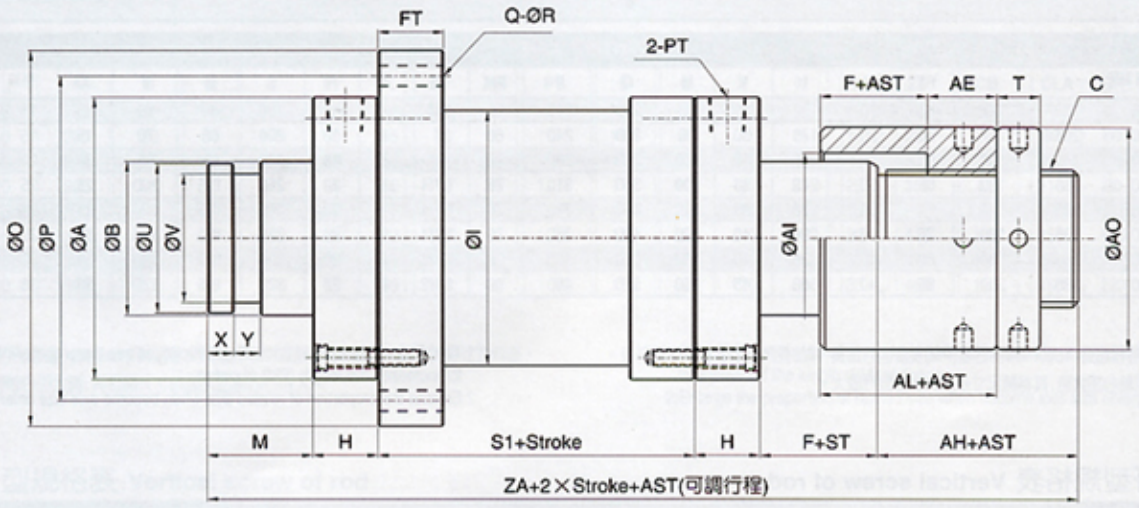

HROA-HROD TYPE																									A(可調帽)TYPE			
BORE \ SIZE	A	B	C	F	FT	H	I	M	O	P	PM	PT	Q	R	S	S1	T	U	V	X	Y	Z	ZA	AH	AE	AI	AO	AL
Ø125	175	60	M50XP2.0	25	45	50	152	80	240	210	60	3/4	6	18	125	100	15	60	50	15	15	255	355	50	35	70	100	60
Ø150	200	80	M70XP2.0	25	50	50	175	80	280	240	60	1	6	18	130	100	20	80	70	15	15	260	365	60	40	95	120	65
Ø180	240	100	M90XP2.0	30	60	60	216	100	320	280	70	1	6	18	150	110	30	95	85	20	20	310	430	70	40	120	150	70
Ø200	260	120	M100XP2.0	30	65	70	242	100	350	310	70	1.1/4	6	20	155	110	30	115	100	25	25	325	450	70	40	140	180	70
Ø225	290	140	M120XP3.0	30	70	70	270	120	380	340	70	1.1/4	8	20	160	110	30	135	120	25	25	350	475	75	45	160	200	75
Ø250	330	160	M140XP3.0	30	75	75	298	120	440	380	70	1.1/4	8	24	170	120	35	155	140	30	30	365	505	85	50	190	240	80
Ø280	360	180	M160XP3.0	30	80	80	330	150	500	430	70	1.1/2	10	26	175	120	40	175	150	30	30	405	550	90	50	210	260	80
Ø300	380	200	M180XP3.0	35	85	90	350	150	550	460	90	1.1/2	10	28	200	140	40	195	170	35	35	440	605	100	60	230	290	95

備註：

1..HRO行程超過 1500mm時,活塞(PM)長度自行加長,其加長尺寸請參閱特性資料表。
2.本系列軸心加大時,其相關尺寸依加大比例自行放大。
3.AST為客戶指定之可調行程。

1.The HRO stroke exceed (includes)1500mm, as see the property information for increased the length (PM) of piston.
2.Enlarge the proportion of related size when become axis size enlarge.
3.AST: Adjustable stroke by customer assignment.

大型圓型油壓缸B型外觀尺寸圖
21Mpa HROB Series B Dimensional Features

HROB TYPE

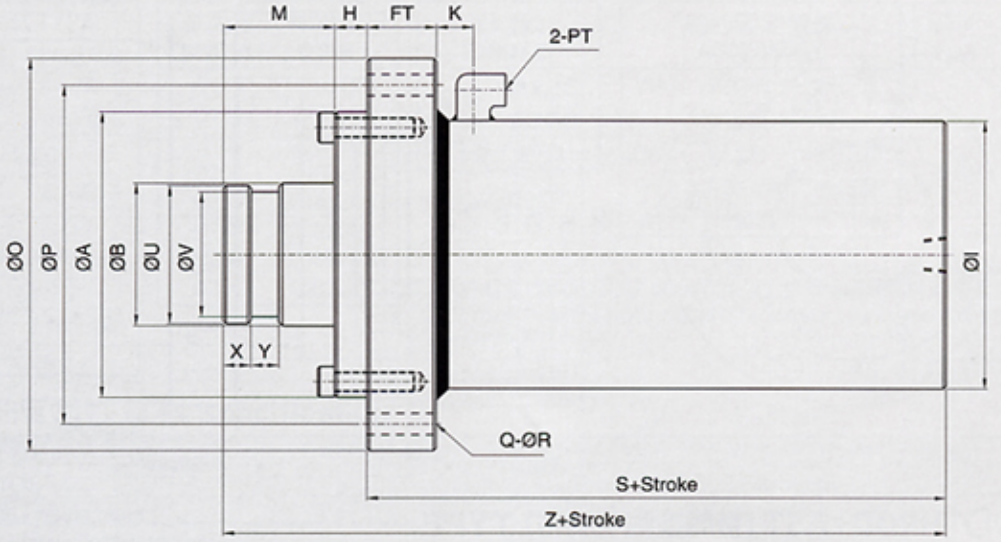

HROB TYPE

BORE \ SIZE	A	B	FT	H	I	K	M	O	P	PM	PT	Q	R	S	U	V	X	Y	Z
Ø125	180	60	45	20	152	30	80	240	210	60	3/4	6	18	190	60	50	15	15	290
Ø150	205	80	50	20	175	30	80	280	240	60	1	6	18	200	80	70	15	15	300
Ø180	245	100	60	30	216	30	100	320	280	70	1	6	18	230	95	85	20	20	360
Ø200	265	120	65	30	242	35	100	350	310	70	1.1/4	6	20	250	115	100	25	25	380
Ø225	295	140	70	35	270	35	120	380	340	70	1.1/4	8	20	260	135	120	25	25	415
Ø250	335	160	75	35	298	40	120	440	380	70	1.1/4	8	24	275	155	140	30	30	430
Ø280	365	180	80	40	330	40	150	500	430	70	1.1/2	10	26	290	175	150	30	30	480
Ø300	385	200	85	40	350	45	150	550	460	90	1.1/2	10	28	320	195	170	35	35	510

備註：

1..HRO行程超過 1500mm時,活塞(PM)長度自行加長,其加長尺寸請參閱特性資料表。
2.本系列軸心加大時,其相關尺寸依加大比例自行放大。

1.The HRO stroke exceed (includes)1500mm, as see the property information for increased the length (PM) of piston.
2.Enlarge the proportion of related size when become axis size enlarge.

外牙型規格表 Vertical screw of rod

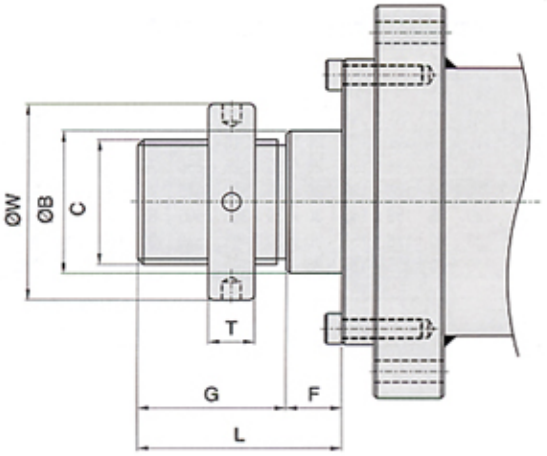

BORE \ SIZE	B	C	F	G	L	T	W
Ø125	60	M50XP2.0	25	70	95	15	65
Ø150	80	M70XP2.0	25	80	105	20	95
Ø180	100	M90XP2.0	30	100	130	30	120
Ø200	120	M100XP2.0	30	120	150	30	140
Ø225	140	M120XP3.0	30	140	170	30	160
Ø250	160	M140XP3.0	30	150	180	35	190
Ø280	180	M160XP4.0	30	160	190	40	210
Ø300	200	M180XP4.0	35	160	195	40	230

ASHUN

大型圓型油壓缸CA型尺寸圖
21Mpa HROC Series CA Dimensional Features

HROC HROC TYPE

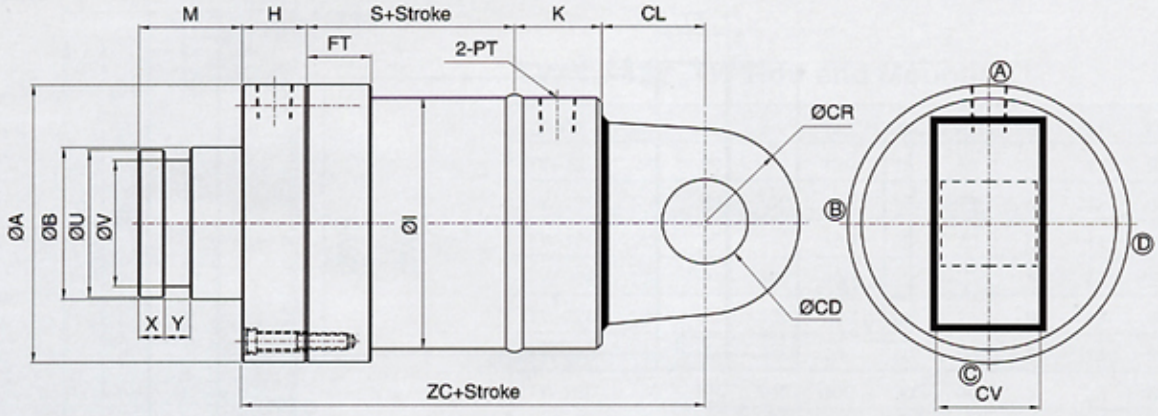

HROC TYPE																CA TYPE			
BORE \ SIZE	A	B	H	I	FT	K	M	PM	PT	S	U	V	X	Y	ZC	CD	CL	CR	CV
Ø125	175	60	50	152	45	50	80	60	3/4	100	60	50	15	15	270	50	70	50	55
Ø150	200	80	50	175	50	55	80	60	1	100	80	70	15	15	285	60	80	60	60
Ø180	240	100	60	216	60	55	100	70	1	110	95	85	20	20	325	70	100	70	80
Ø200	260	120	70	242	65	65	100	70	1.1/4	110	115	100	25	25	355	80	110	80	90
Ø225	290	140	70	270	70	65	120	70	1.1/4	110	135	120	25	25	365	90	120	90	100
Ø250	330	160	75	298	75	70	120	70	1.1/4	115	155	140	30	30	410	100	150	100	120
Ø280	360	180	80	330	80	80	150	70	1.1/2	115	175	150	30	30	425	100	150	100	120
Ø300	380	200	90	350	85	80	150	90	1.1/2	135	195	170	35	35	465	120	160	120	140

備註：

1..HRO行程超過 1500mm時,活塞(PM)長度自行加長,其加長尺寸請參閱特性資料表。
2.本系列軸心加大時,其相關尺寸依加大比例自行放大。

1.The HRO stroke exceed (includes)1500mm, as see the property information for increased the length (PM) of piston.
2.Enlarge the proportion of related size when become axis size enlarge.

外牙型規格表 Vertical screw of rod

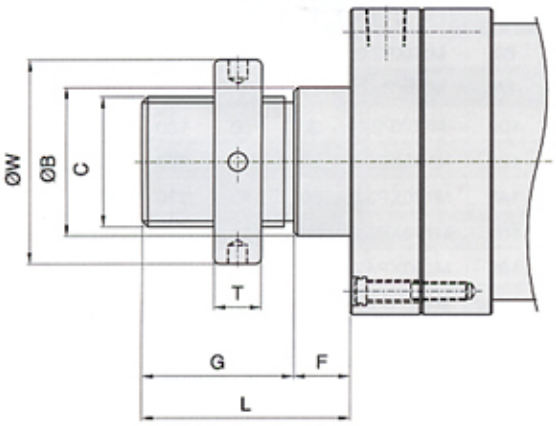

BORE \ SIZE	B	C	F	G	L	T	W
Ø125	60	M50XP2.0	25	70	95	15	65
Ø150	80	M70XP2.0	25	80	105	20	95
Ø180	100	M90XP2.0	30	100	130	30	120
Ø200	120	M100XP2.0	30	120	150	30	140
Ø225	140	M120XP3.0	30	140	170	30	160
Ø250	160	M140XP3.0	30	150	180	35	190
Ø280	180	M160XP4.0	30	160	190	40	210
Ø300	200	M180XP4.0	35	160	195	40	230

大型圓型油壓缸FB型尺寸圖
21Mpa HRO Series FB Dimensional Features

HROE TYPE

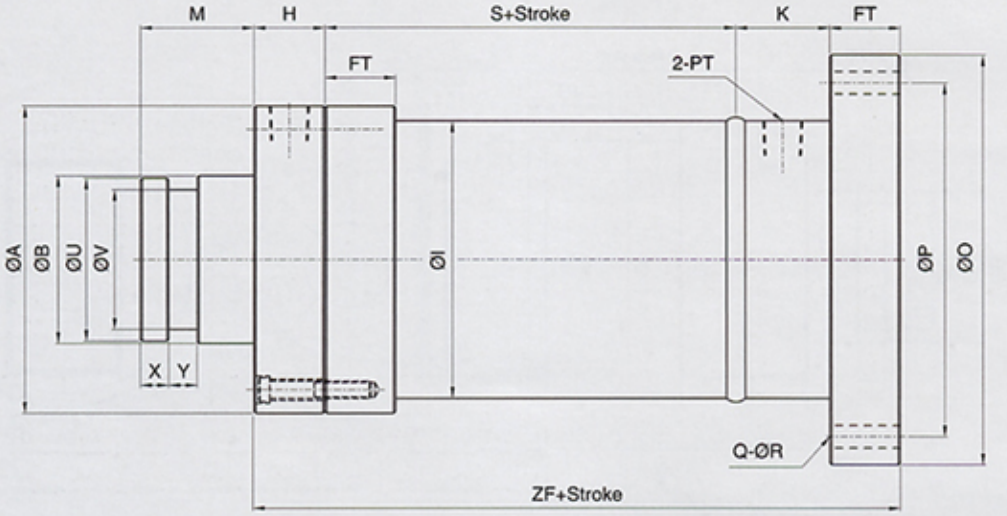

HROE TYPE

BORE \ SIZE	A	B	FT	H	I	K	M	O	P	PM	PT	Q	R	S	U	V	X	Y	ZF
Ø125	175	60	45	50	152	50	80	240	190	60	3/4	6	18	100	60	50	15	15	245
Ø150	200	80	50	50	175	55	80	280	240	60	1	6	18	100	80	70	15	15	255
Ø180	240	100	60	60	216	55	100	320	280	70	1	6	18	110	95	85	20	20	285
Ø200	260	120	65	70	242	65	100	350	310	70	1.1/4	6	20	110	115	100	25	25	310
Ø225	290	140	70	70	270	65	120	380	340	70	1.1/4	8	20	110	135	120	25	25	315
Ø250	330	160	75	75	298	70	120	440	380	70	1.1/4	8	24	115	155	140	30	30	335
Ø280	360	180	80	80	330	80	150	500	430	70	1.1/2	10	26	115	175	150	30	30	355
Ø300	380	200	85	90	350	80	150	550	460	90	1.1/2	10	28	135	195	170	35	35	390

備註：

1..HRO行程超過 1500mm時.活塞(PM)長度自行加長.其加長尺寸請參閱特性資料表。
2.本系列軸心加大時.其相關尺寸依加大比例自行放大。

1.The HRO stroke exceed (includes)1500mm, as see the property information for increased the length (PM) of piston.
2.Enlarge the proportion of related size when become axis size enlarge.

外牙型規格表 Vertical screw of rod

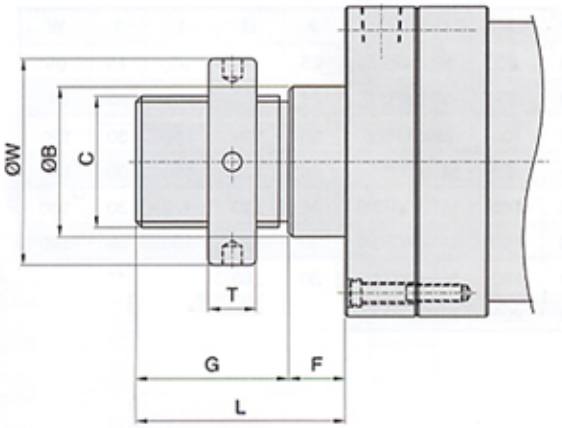

BORE \ SIZE	B	C	F	G	L	T	W
Ø125	60	M50XP2.0	25	70	95	15	65
Ø150	80	M70XP2.0	25	80	105	20	95
Ø180	100	M90XP2.0	30	100	130	30	120
Ø200	120	M100XP2.0	30	120	150	30	140
Ø225	140	M120XP3.0	30	140	170	30	160
Ø250	160	M140XP3.0	30	150	180	35	190
Ø280	180	M160XP4.0	30	160	190	40	210
Ø300	200	M180XP4.0	35	160	195	40	230

大型圓型油壓缸軸心配件尺寸圖 Accessories For HRO Series Cylinders

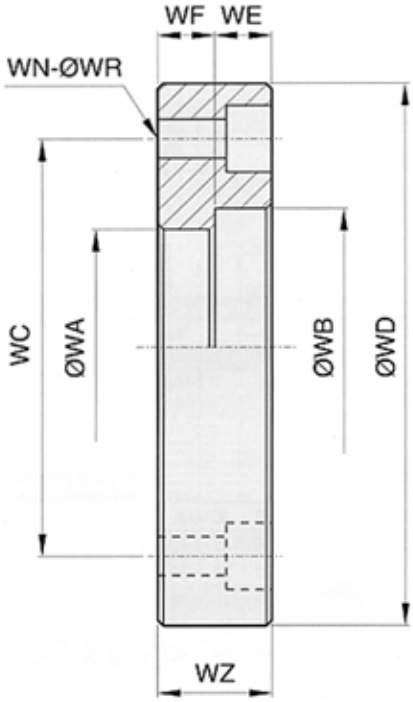

TW半月套 TW Rod end Mounting

TYPE	WA	WB	WC	WD	WE	WF	WN	WR	WZ
TW-125	50	60	90	120	15	15	6	12	30
TW-150	70	80	110	140	15	15	6	12	30
TW-180	85	95	140	180	20	20	6	14	40
TW-200	100	115	160	200	25	25	6	14	50
TW-225	120	135	180	220	25	25	8	18	50
TW-250	140	155	210	260	30	30	8	18	60
TW-280	150	175	240	300	30	30	8	22	60
TW-300	170	195	260	320	35	35	8	22	70

Material:SS41 Units:mm

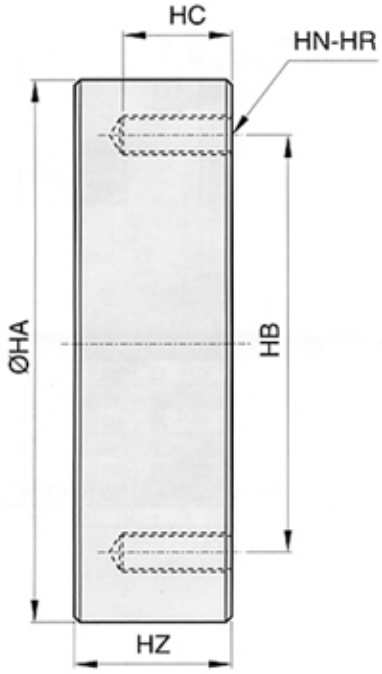

TH焊接圓板 TH Rod end Mounting

TYPE	HA	HB	HC	HN	HR	HZ
TH-125	120	90	30	6	M10XP1.5	40
TH-150	140	110	30	6	M10XP1.5	40
TH-180	180	140	35	6	M12XP1.75	45
TH-200	200	160	35	6	M12XP1.75	45
TH-225	220	180	40	8	M16XP2.0	50
TH-250	260	210	40	8	M16XP2.0	50
TH-280	300	240	45	8	M20XP2.5	55
TH-300	320	260	50	8	M20XP2.5	60

Material:SS41 Units:mm

快速索引

QUICK INDEX

油壓系列軸心配件
Accessories for Hydraulic Series Cylinders ..... P.106~107

Y型接頭附Pin Y ROD CLEVIS(with pin) ..... P. 106

I型接頭 I ROD END MOUNTING ..... P. 106

I型接頭 I ROD END MOUNTING
H焊套接頭 H ROD END MOUNTING T型接頭 T ROD END MOUNTING ..... P. 107

Series Y, I

油壓系列軸心配件尺寸圖 Accessories fot Hydraulic Series Cylinders

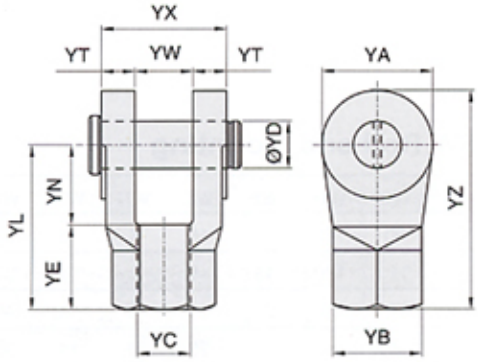

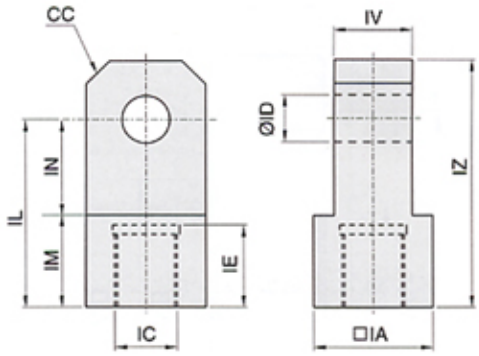

Y型接頭附pin Rod Clevis(With pin) Material:FCD45(鑄鐵)											
TYPE	YA	YB	YC	YD	YE	YL	YN	YT	YW	YX	YZ
MY-014	29	27.5	M14XP1.5	12	35	56	21	14	16	44	70
MY-016	29	27.5	M16XP1.5	12	35	56	21	14	16	44	70
MY-018	29	27.5	M18XP1.5	12	35	56	21	14	16	44	70
MY-022	46	37	M22XP1.5	20	36	70	34	14	24	52	93
MY-026	52	42	M26XP1.5	20	35	70	35	15	28	58	96
MY-030	55	42	M30XP1.5	20	41	80	39	20	32	72	107
MY-030A	55	47	M30XP1.5	25	41	80	39	22	40	84	107

I 型接頭 I Rod end mounting Material:SS41(鐵製)										
TYPE	IA	IC	ID	IE	IL	IM	IN	IV	IZ	CC
FI-018	32	M18XP1.5	16	23	50	25	25	18	70	8
FI-022	40	M22XP1.5	20	23	55	25	30	20	80	10
FI-026	50	M26XP1.5	25	28	60	30	30	25	90	10
FI-036	60	M36XP1.5	30	32	75	35	40	35	110	10
FI-045	70	M45XP2.0	35	38	90	40	50	40	130	10

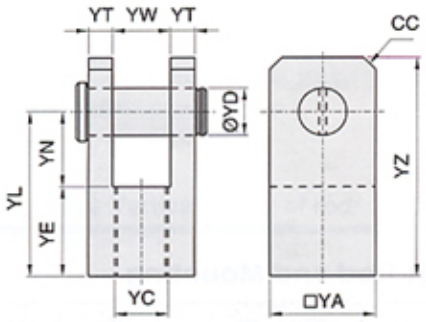

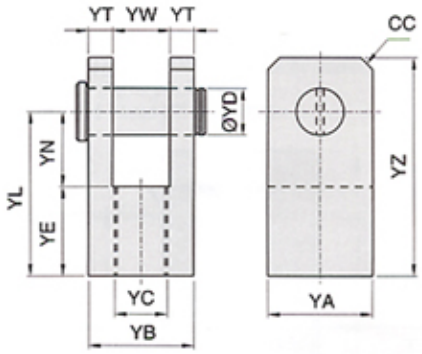

Y型接頭附pin Rod Clevis(With pin) Material:SS41(鐵製)										
TYPE	YA	YC	YD	YE	YN	YL	YT	YW	YZ	CC
HY-014	32	M14XP1.5	12	36	32	56	8	16	70	6
HY-016	32	M16XP1.5	12	36	33	56	8	16	70	6
HY-018	38	M18XP1.5	16	36	25	56	8	16	70	6
HY-022	44	M22XP1.5	20	38	32	70	10	24	93	10
HY-026	50	M26XP1.5	20	37	33	70	11.5	27	96	10
HY-030	60	M30XP1.5	30	40	48	88	15	30	115	10
HY-040	70	M40XP2.0	35	47	46	93	20	30	127	15
HY-050	80	M50XP2.0	40	50	50	100	22.5	35	140	15
HY-070	115	M70XP2.0	50	60	60	120	27.5	60	170	25
HY-090	150	M90XP2.0	70	85	85	170	40	70	240	30

Y型接頭附pin Rod Clevis(With pin) Material:SS41(鐵製)											
TYPE	YA	YB	YC	YD	YE	YN	YL	YT	YW	YZ	CC
FY-018	32	38	M18XP1.5	16	25	25	50	10	18	70	8
FY-022	40	44	M22XP1.5	20	25	30	55	12	20	80	10
FY-026	50	55	M26XP1.5	25	30	30	60	15	25	90	15
FY-036	60	65	M36XP1.5	30	35	40	75	15	35	110	15
FY-045	70	80	M45XP2.0	35	40	50	90	20	40	135	15

ASHUN

油壓系列軸心配件尺寸圖 Accessories fot Hydraulic Series Cylinders

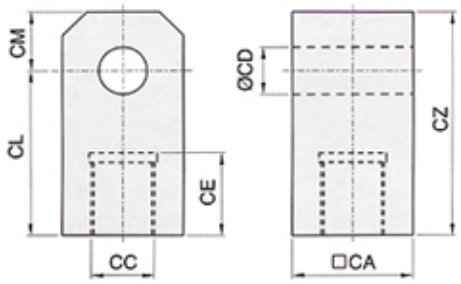

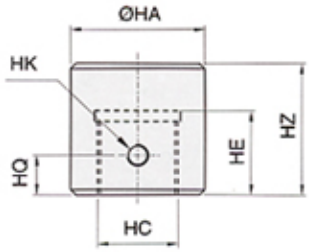

I 型接頭 I Rod end mounting Material:SS41							
TYPE	□CA	CC	CD	CE	CL	CM	CZ
CI-026	44.5	M26XP1.5	25	40	60	25	85
CI-030	50.8	M30XP1.5	30	45	70	30	100
CI-040	60	M40XP2.0	30	50	75	30	105
CI-050	70	M50XP2.0	35	55	85	35	120
CI-060	90	M60XP2.0	50	70	105	50	155

H焊套接頭 H Rod end mounting Material:SS41						
TYPE	ØHA	HC	HE	HK	HQ	HZ
HH-010	20	M10XP1.25	20	M6XP1.0	10	30
HH-014	35	M14XP1.5	25	M8XP1.25	12	40
HH-016	35	M16XP1.5	25	M8XP1.25	12	40
HH-018	35	M18XP1.5	25	M8XP1.25	12	40
HH-022	40	M22XP1.5	32	M8XP1.25	15	50
HH-026	45	M26XP1.5	32	M8XP1.25	15	50
HH-030	50	M30XP1.5	35	M8XP1.25	20	55
HH-036	55	M36XP2.0	40	M8XP1.25	20	60
HH-040	60	M40XP2.0	48	M10XP1.5	25	65
HH-045	70	M45XP2.0	52	M10XP1.5	25	70
HH-050	80	M50XP2.0	55	M10XP1.5	25	75
HH-060	90	M60XP2.0	55	M10XP1.5	30	80
HH-070	100	M70XP2.0	65	M12XP1.75	30	100
HH-090	140	M90XP2.0	85	M12XP1.75	40	120

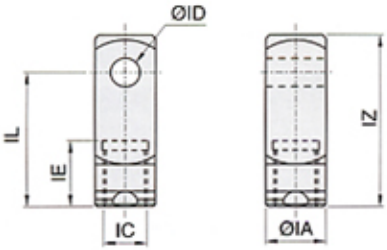

I 型接頭 I Rod end mounting Material:SS41						
TYPE	IA	IC	ID	IE	IL	IZ
SI-014	25.4	M14XP1.5	12	40	57	73
SI-016	25.4	M16XP1.5	12	40	57	73
SI-018	25.4	M18XP1.5	12	40	57	73
SI-022	31.75	M22XP1.5	16	40	59	76

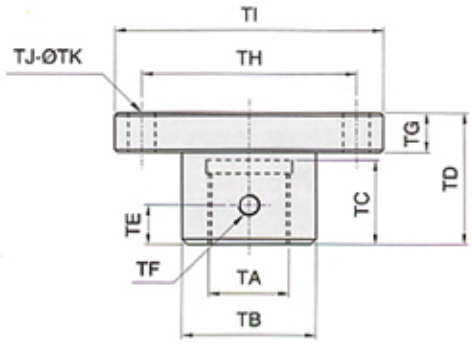

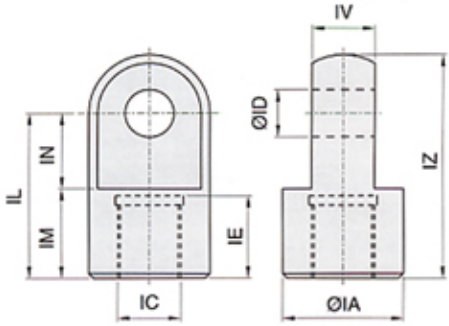

I 型接頭 I Rod end mounting Material:SS41									
TYPE	IA	IC	ØID	IE	IL	IM	IN	IV	IZ
HI-026	50	M26XP1.5	25	40	85	45	40	30	110
HI-030	55	M30XP1.5	25	40	83	45	38	35	110
HI-040	75	M40XP2.0	35	50	90	40	50	45	130
HI-050	90	M50XP2.0	50	60	105	50	55	55	150
HI-070	115	M70XP2.0	60	65	120	65	55	60	177
HI-090	150	M90XP2.0	70	82	180	90	90	70	250

T 型接頭 T Rod end mounting Material:SS41											
TYPE	TA	TB	TC	TD	TE	TF	TG	TH	TI	TJ	TK
HT-010	M10XP1.25	20	20	30	10	M6XP1.0	8	40	60	4	8
HT-014	M14XP1.5	30	25	40	12	M8XP1.25	10	55	80	4	10
HT-016	M16XP1.5	30	25	40	12	M8XP1.25	10	55	80	4	10
HT-018	M18XP1.5	30	25	40	12	M8XP1.25	10	55	80	4	10
HT-022	M22XP1.5	35	32	50	15	M8XP1.25	15	65	85	4	10
HT-026	M26XP1.5	40	32	50	15	M8XP1.25	15	70	90	4	10
HT-030	M30XP1.5	55	35	55	20	M8XP1.25	20	75	100	4	12
HT-036	M36XP2.0	50	48	55	20	M8XP1.25	20	80	105	4	12
HT-040	M40XP2.0	60	48	65	25	M10XP1.5	25	90	115	6	12
HT-045	M45XP2.0	70	55	65	25	M10XP1.5	25	100	125	6	12
HT-050	M50XP2.0	80	55	75	25	M10XP1.5	25	110	140	6	14
HT-060	M60XP2.0	90	55	80	30	M10XP1.5	30	120	150	6	14
HT-070	M70XP2.0	100	65	100	30	M12XP1.75	30	140	180	6	18
HT-090	M90XP2.0	140	85	120	40	M12XP1.75	40	180	220	6	18

快速索引

QUICK INDEX

技術資料
Technical Data ..... P.108~109

氣缸理論出力表 SPECIFICATION PNEUMATIC CYLINDERS ..... P. 108

空氣消耗量 COMPRESSED AIR CONSUMPTION ..... P. 108

油壓缸理論出力表 SPECIFICATION OF HYDRAULICS CYLINDERS ..... P. 109

壓力互算表 VARIED PRESSURE INTERCHANGE CHART ..... P. 109

流量互算表 VARIED FLOW RATE INTERCHANGE CHART ..... P. 109

技術資料 TECHNICAL DATA

氣缸理論出力表 SPECIFICATION OF PNEUMATIC CYLINDERS (出力kgf)

F = P × A − f

F:氣缸出力(kgf)
P:使用壓力(kgf/cm²)
A:截面積(cm²)
f:摩擦阻力(kgf)

單位：(kgf)

缸 徑 (mm)			10	12	16	20	25	32	40	50	63	80	100
軸 徑 (mm)			6	6	6	8	10	12	16	20	20	25	25
受壓面積 (cm²)		A1	0.8	1.1	2.0	3.1	4.9	8.0	12.5	19.6	31.2	50.2	78.5
		A2	0.3	0.9	1.7	2.6	4.1	6.9	10.6	16.5	28.0	45.3	73.6
操作壓力 (kgf/cm²)	1	A1	0.8	1.1	2.0	3.1	4.9	8.0	12.6	19.6	31.2	50.2	78.5
		A2	0.3	0.9	1.7	2.6	4.1	6.9	10.6	16.5	28.0	45.3	73.6
	2	A1	1.6	2.3	4.0	6.3	9.8	16.1	25.1	39.3	62.3	100.5	157.0
		A2	0.6	1.7	3.5	5.3	8.2	13.8	21.1	33.0	56.0	90.7	147.2
	3	A1	2.4	3.4	6.0	9.4	14.7	24.1	37.7	58.9	93.5	150.7	235.5
		A2	1.0	2.5	5.2	7.9	12.4	20.7	31.7	49.5	84.0	136.0	220.8
	4	A1	3.2	4.5	8.0	12.6	19.6	32.2	50.2	78.5	124.6	201.0	314.0
		A2	1.3	3.4	6.9	10.6	16.5	27.6	42.2	65.9	112.1	181.3	294.4
	5	A1	4.0	5.7	10.1	15.7	24.5	40.2	62.8	98.1	155.8	251.2	392.5
		A2	1.6	4.2	8.7	13.2	20.6	34.5	52.8	82.4	140.1	226.7	368.0
	6	A1	4.7	6.8	12.1	18.9	29.4	48.2	75.4	117.8	186.9	301.4	471.0
		A2	2.0	5.1	10.4	15.8	24.7	41.5	63.3	98.9	168.1	272.0	441.6
	7	A1	5.5	7.9	14.1	22.0	34.3	56.3	87.9	137.4	218.1	351.7	549.5
		A2	2.2	5.9	12.1	18.5	28.9	48.4	73.9	115.4	196.1	317.3	515.2
	8	A1	6.3	9.0	16.1	25.1	39.3	64.3	100.5	157.0	249.3	401.9	628.0
		A2	2.6	6.8	13.8	21.1	33.0	55.3	84.4	131.9	224.1	362.7	588.8
	9	A1	7.1	10.2	18.1	28.3	44.2	72.3	113.0	176.6	280.4	452.2	706.5
		A2	2.9	7.6	15.5	23.8	37.1	62.2	95.0	148.4	252.1	408.0	662.4

*註：以上皆為理論數據；實際採用前，須考慮摩擦阻力及機械效率值併加計算。

空氣消耗量 COMPRESSED AIR CONSUMPTION

孔徑 BORE(mm)		12	16	20	25	32	40	50	63	80	100	125	150
軸心 ROD(mm)		6	6	8	10	12	16	20	20	25	25	35	40
範圍 AREA(mm²)	A	113	201	314	491	804	1257	1963	3117	5027	7854	12271	17671
操作壓力 OPERATING PRESSURE (MPa)	B	85	173	264	412	691	1056	1649	2803	4536	7363	11309	16415
	0.1	0.040	0.075	0.116	0.181	0.299	0.462	0.722	1.183	1.912	3.042	4.714	6.814
	0.2	0.059	0.112	0.173	0.271	0.448	0.693	1.083	1.775	2.867	4.563	7.071	10.221
	0.3	0.079	0.150	0.231	0.361	0.598	0.924	1.444	2.367	3.823	6.084	9.428	13.628
	0.4	0.099	0.187	0.289	0.451	0.747	1.156	1.805	2.959	4.779	7.605	11.785	17.035
	0.5	0.119	0.224	0.347	0.542	0.897	1.387	2.167	3.550	5.734	9.126	14.142	20.441
	0.6	0.138	0.262	0.405	0.632	1.046	1.618	2.528	4.142	6.690	10.647	16.499	23.848
	0.7	0.158	0.299	0.463	0.722	1.196	1.849	2.889	4.734	7.646	12.168	18.856	27.255
	0.8	0.178	0.336	0.520	0.812	1.345	2.080	3.250	5.325	8.602	13.689	21.213	30.662
	0.9	0.198	0.374	0.578	0.903	1.495	2.311	3.611	5.917	9.557	15.209	23.570	34.069
	1.0	0.218	0.411	0.636	0.993	1.644	2.542	3.972	6.509	10.513	16.927	25.927	37.476

※本表數值係指氣缸在行程100mm往返一個來回之空氣消耗量
The table is for a complete cycle in 100mm stroke

※空氣消耗量計算方式
The method of calculation(Compressed air consumption)

$$Qn=(Aa+Ab)\times L\times\frac{P+0.101}{0.101}\times n\times 10^{-6}$$

Qn:Compressed air consumption(l/min) 氣缸空氣消耗量
Aa:Piston area of A(mm²) A方向之截面積
Ab:Piston area of B(mm²) B方向之截面積
L:Stroke of cylinder(mm) 氣缸行程
P:Air pressure(MPa) 操作壓力
n:Cycle of operation(cycle/min) 操作頻率

技術資料 TECHNICAL DATA

油壓缸理論出力表 SPECIFICATION OF HYDRAULICS CYLINDERS (出力 kgf)

油壓缸內徑 Ø(mm)				30	40	50	63	80	100	125	150	180	200	224	250
受壓面積 cm^2	推出			7.07	12.57	19.64	31.17	50.27	78.54	122.72	176.72	254.47	314.16	394.08	490.87
	拉入	桿徑	C	5.53	10.02	15.7	25.01	4037	62.64	98.09	141.46	204.21	250.54	315.54	392.35
			B	4.52	8.63	13.48	21.28	34.36	53.91	83.13	119.97	175.93	215.64	271.36	336.94
理論出力 kgf	壓力 70 (kgf/cm^2)	推出		495	880	1375	2182	3519	5498	8590	12370	17813	21991	27586	34361
		拉入	C	387	702	1099	1751	2826	4385	6867	9902	14295	17538	22086	27465
			B	317	604	944	1489	2406	3774	5819	8398	12315	15095	18995	23586
	140 (kgf/cm^2)	推出		990	1760	2750	4343	7038	10995	17181	24741	35626	43982	55171	68721
		拉入	C	774	1403	2198	3501	5652	8769	13733	19804	28589	35076	44176	54929
			B	633	1208	1887	2979	4810	7547	11638	16796	24630	30190	37990	47172
	210 (kgf/cm^2)	推出		1485	2640	4125	6546	10557	16494	25770	37110	53439	65973	82758	34361
		拉入	C	1161	2106	3297	5253	8478	13155	20601	29706	42885	52614	66258	82395
			B	951	1812	2832	4467	7218	11322	17457	25194	36945	45285	56985	70758
速度比	推出			1	1	1	1	1	1	1	1	1	1	1	1
	拉入	桿徑	C	1.28	1.25	1.25	1.25	1.25	1.25	1.25	1.25	1.25	1.25	1.25	1.25
			B	1.56	1.46	1.46	1.46	1.46	1.46	1.46	1.46	1.46	1.46	1.46	1.46

壓力互算表 VARIED PRESSURE INTERCHANGE CHART

單位 UNIT	Pa	kPa	MPa	bar	mbar	kgf/cm^2	cmH_2O	mmH_2O	mmHg	p.s.i.
Pa	1	10^{-3}	10^{-5}	10^{-5}	10^{-2}	10.2×10^{-6}	10.2×10^{-3}	101.97×10^{-3}	7.5×10^{-3}	0.15×10^{-3}
kPa	10^{3}	1	10^{-3}	10^{-2}	10	10.2×10^{-3}	10.2	101.97	7.5	0.15
MPa	10^{5}	10^{3}	1	10	10^{4}	10.2	10.2×10^{3}	101.97×10^{3}	7.5×10^{3}	0.15×10^{3}
bar	10^{5}	10^{2}	10^{-1}	1	10^{3}	1.02	1.02×10^{3}	10.2×10^{3}	750.06	14.5
mbar	10^{2}	10^{-1}	10^{-4}	10	1	1.02×10^{-3}	1.02	10.2	0.75	14.5×10^{-3}
kgf/cm^2	98066.5	98.07	98.07×10^{-3}	0.98	980.67	1	1000	10000	735.56	14.22
cmH_2O	98.06	98.07×10^{-3}	98.07×10^{-6}	0.98×10^{-3}	0.98	10^{-3}	1	10	0.74	14.22×10^{3}
mmH_2O	9.806	9.807×10^{-3}	9.807×10^{-6}	98.07×10^{-5}	98.07×10^{3}	10^{-4}	0.1	1	73.56×10^{-3}	1.42×10^{-3}
mmHg	133.32	133.32×10^{-3}	133.32×10^{-6}	1.33×10^{-3}	1.33	1.36×10^{-3}	1.36	13.6	1	19.34×10^{3}
p.s.i.	6894.76	6.89	6.89×10^{-3}	68.95×10^{3}	68.95	70.31×10^{-3}	70.31	703.07	51.71	1

流量互算表 VARIED FLOW RATE INTERCHANGE CHART

單位 UNIT	m^3/s	l/s	cm^3/s	m^3/h	m^3/min	l/h	l/min	ft^3/min (scfm)	gallon min UK	gallon min USA
m^3/s	1	10^{3}	10^{-6}	3.6×10^{6}	60	3.6×10^{6}	60×10^{3}	2.12×10^{3}	13.2×10^{3}	15.85×10^{3}
l/s	10^{-3}	1	10^{3}	3.6	60×10^{-3}	3.6×10^{3}	60	2.12	13.2	15.85
cm^3/s	10^{-6}	10^{-3}	1	3.6×10^{-3}	60×10^{-6}	3.6	60×10^{-3}	2.12×10^{-3}	13.2×10^{-3}	15.85×10^{-3}
m^3/h	0.28×10^{-3}	0.28	0.28×10^{3}	1	16.67×10^{3}	10^{3}	16.67	0.59	3.67	4.4
m^3/min	16.67×10^{-3}	16.67	16.67×10^{3}	60	1	60×10^{3}	10^{3}	35.31	219.97	264.17
l/h	0.28×10^{-6}	0.28×10^{-3}	0.28	10^{-3}	16.67×10^{6}	1	16.67×10^{3}	0.59×10^{-3}	3.67×10^{-3}	4.4×10^{-3}
l/min	16.61×10^{-6}	16.67×10^{3}	16.67	60×10^{-3}	10^{-3}	60	1	35.31×10^{-3}	219.97×10^{3}	264×10^{-3}
ft^3/min(scfm)	0.47×10^{-3}	0.47	0.47×10^{3}	1.699	28.32×10^{3}	1.699×10^{3}	28.32	1	6.23	7.48
gallon min UK	75.79×10^{-6}	75.77×10^{-3}	75.77	0.273	4.45×10^{3}	0.273×10^{3}	4.55	0.16	1	1.2
gallon min USA	63.09×10^{-6}	63.09×10^{-3}	63.09	0.227	3.79×10^{3}	0.277×10^{3}	3.79	0.13	0.83	1

油順機械工廠股份有限公司
ASHUN FLUID POWER CO., LTD.

公司地點：台中縣大里市瓦磁路50-1號

工廠地點：樹王廠：台中縣大里市樹王路467-3號
瓦磁廠：台中縣大里市瓦磁路50-1號
TEL:886-4-24071322 FAX:886-4-24070255

營業據點：台北營業所/台北縣三重市光復路2段162-2號
TEL:886-2-22781199 FAX:886-2-22781133

台中營業所/台中縣大里市樹王路467-3號
TEL:886-4-24072311 FAX:886-4-24063266

高雄營業所/高雄市十全二路
TEL:886-7-3110191 FAX:886-7-3118879

※本型錄所示尺寸，如有所變動，因無法一一通知時，敬請見諒。
Specifications and design characteristics may be change without prior notice.

PLANNING/04-23140195 麗文廣告